REFERENCE
INTERCONNECT OFFERING

from

eircom Ltd.

This is not a legal document. *eircom* is not bound by this document and may amend it from time to time. This document is without prejudice to the legal position or the rights and duties of *eircom*.

Version Status Report

Version	Status	Source	Effective Date
2.5	Approved	02/97	
2.6	Approved	02/98	
2.7	Approved	03/17	
2.8 FRIACO	Approved	Letter Dated 24/2/03	
2.9	Approved	Billing Dispute Process Industry Forum	
3.0	Approved	ComReg Approved 29/05/03	
3.1	Approved	ComReg Approved 16/7/03	
3.2	Approved	PAC Industry Forum	
3.3	Approved	ComReg approved 03/125 on 22/10/03. Includes approved test of RIO 3.5	
3.5	Approved	Information Notice, Partial Private Circuits, Update on pricing and migration, Doc No. 03/119, 3 October 2003. Includes approved text of RIO 3.3 and ComReg Direction of D20/03	
3.6	Approved	Forecasting changes as approved by ComReg 12/12/03. CPS Code of Practice changes as approved by ComReg on the 23/12/03	
3.7	Approved	ComReg direction 08/03/04	
3.8	Approved	ComReg approved on 30/03/04	
3.9	Approved	ComReg approved on 12/05/04	

1. Preface

1.1 The Reference Interconnection Offer, which is presented in the form of a standard contract, deals with Interconnect Services which *eircom* offers to operators authorised under the Authorisation Regulations, operating in the Irish market. It also deals with Interconnect Services, which *eircom* offers to operators authorised in other EU Member States, for termination of traffic presented at *eircom* Interconnect Nodes which originates in other EU Member States.

The charges being made available in this Reference Interconnect Offer will be available to all interconnecting Operators on a non-discriminatory basis. In the event that agreement is reached with any single Operator on new rates for any service covered by this Reference Interconnect Offer, then those rates will be made available to all interconnecting Operators.

1.2 The Reference Interconnection Offer only applies to,

(a) Undertakings who are authorised under the Authorisations Regulations and who have an entitlement to Interconnect pursuant to the provisions of the Access Regulations.

(b) Undertakings who have an entitlement to Interconnect and who are authorised to provide electronic communications networks or electronic communications services in other EU Member States and who present traffic at the *eircom* Interconnect Node which originated in another EU Member State.

Interconnection entails reciprocal rights and obligations. *eircom* believe they should be able to obtain, where relevant, from the interconnected Operators, similar services on similar terms and conditions as those it offers to that Operator particularly to convey traffic from its customers to the Operator's customers. These services provided by the other Operator subject to agreement shall be included in the Interconnect Agreement between *eircom* and that Operator.

eircom will not be responsible for the content of traffic conveyed through its Interconnect Services.

1.3 This Reference Interconnect Offer takes effect from the date approved by the National Regulator and shall continue in effect until superseded by a revised Reference Interconnect Offer.

1.4 *eircom* confirms that this RIO contains all interconnect services currently offered by *eircom* to all relevant operators, including those interconnect services offered to its own retail arm or subsidiaries. If and when new interconnect services are identified, whether as a new development by

eircom or an existing interface being re-classified as an interconnect service, *eircom* will co-operate in the expedient inclusion of such services into the RIO.

1.5 *eircom* reserves the right to review and to revise this Reference Interconnect Offer on a regular basis. Further, *eircom* shall review and revise this Reference Interconnect offer when required to do so by the National Regulator acting in exercise of the powers conferred on by it by the Access Regulations.

1.6 Any revision of the terms of this Reference Interconnect Offer shall be subject to the approval of the National Regulator. Once approved by the National Regulator, the Revised Interconnect Offer shall replace or amend this Reference Interconnect Offer. Such revised or amended Reference Interconnect Offer shall be published within one (1) week of its approval by the National Regulator.

1.7 References to legislative provisions herein are to be construed as references to such provisions as the same may be amended from time to time.

STANDARD INTERCONNECT AGREEMENT

DATED

between

Operator Name

and

***eircom* Ltd.**

INDEX

1 Introduction
2 Definitions and Interpretation
3 Commencement and Duration
4 Network Interconnect
5 Interconnect Services
6 Charging for Interconnect Services
7 New Services
8 Measurement of Traffic
9 Billing and Payment
10 Network Design and Planning
11 Network Alteration and Modification Costs
12 Network Safety and Protection
13 Numbering
14 Quality of Service
15 Provisioning, Operation and Maintenance
16 Provision of Information
17 Resolution of Disputes
18 Breach, Suspension and Termination
19 Credit Assessment and Credit Risk Management
20 Confidentiality
21 Intellectual Property Rights
22 Review
23 Force Majeure
24 Limitation of Liability
25 Assignment of Rights and Obligations
26 Notices
27 Entire Agreement
28 Waiver
29 Severability
30 Amendments
31 Relationship of Parties
32 Governing Law

Annexes

Annex A Definitions
Annex B Billing and Payments
Annex C Service Schedules

THIS INTERCONNECT AGREEMENT (hereinafter "Agreement" or "Interconnect Agreement") is made on [Date]

between

[Operator Name] having its registered office at the [Operator Address] (hereinafter referred to as "the Operator" or "Operator")

and

eircom Ltd. having its registered office at 114 St. Stephen's Green West, Dublin 2, (hereinafter referred to as *"eircom*")

1. Introduction

Whereas

A. The Operator is authorised under the Authorisation Regulations, to provide an electronic communication network or electronic communication service pursuant to the provisions of the Authorisation Regulations.

B. *eircom* was, prior to the entry into force of the Access Directive[1], required to comply with obligations concerning access and interconnection under the European Communities (Interconnection in Telecommunications) Regulations 1998 (S.I. No 15 of 1998) and is required to continue to comply with such obligations under Regulation 8(1) of the Access Regulations.

C. The Parties have agreed to interconnect their respective networks, in accordance with the principles set out in the Access Regulations, and to the supply of services and facilities on the terms and conditions as provided for in this Agreement.

D. The Parties entering into this Interconnect Agreement recognise the necessity of effective interconnection of their networks in the provision of quality electronic communications services to their respective customers. The Parties believe that a fundamental principle of interconnection is to enable customers of one of the Parties to communicate effectively with customers of the other Party and that accordingly:

(a) interconnection should not be unnecessarily constrained by technical obstacles or limitations which have no justifiable objective basis;

(b) the quality of interconnect services should be optimised to bring benefits to customers and the Parties should aim continuously to improve shared targets for quality of service, operations and maintenance, provisioning and network performance in interconnection;

[1] Directive No. 2002/19/EC of the European Parliament and of the Council of 7 March 2002 on access to, and interconnection of, electronic communications networks and associated facilities

(c) the Parties should exchange technical information willingly in order to make interconnection effective, without prejudice to commercial confidentiality;

(d) the Parties should at all times act so as to facilitate the speedy and effective operation of this Interconnect Agreement, to the benefit of customers and to their mutual advantage;

(e) in implementing services and facilities under this Interconnect Agreement, both Parties should endeavour to minimise the attendant costs, provided that this does not result in additional cost attribution to other products and services provided by either Party and is consistent with agreed quality standards.

In consideration of the mutual covenant and obligations contained in this Agreement, the Parties HEREBY AGREE AS FOLLOWS:

2. Definitions and Interpretation

2.1 In this Interconnect Agreement, except if the context requires otherwise, words and expressions are as defined in Annex A or the relevant Annex C Service Schedule.

2.2 References to Acts, Statutory Instruments and other legislation including European Community legislation are to such legislation as amended from time to time, any legislation of which it is a re-enactment and also includes any sub-ordinate legislation made from time to time under that legislation.

2.3 Terms defined in relevant European Union legislation on the liberalisation of the telecommunication services market or in consequent Irish implementing legislation (which, for the avoidance of doubt includes Decisions published by the National Regulator) shall, where used in this Agreement, have the meanings ascribed to them in such legislation.

2.4 The following documents form part of this Interconnect Agreement:

1. Main body of this Interconnect Agreement
   Annex A: Definitions
   Annex B: Billing and Payments
   Annex C: Service Schedules
2. *eircom* RIO Price List
3. *eircom* Switched Transit Routing and Price List
4. eircom Network Price List
5. Non Disclosure Agreement (signed by the Parties)
6. Service Level Agreements
7. Codes of Practice
8. Forms – Billing and Order
9. The Network Plan (signed by the Parties)
10. Product Descriptions
11. *eircom* Call Origination and Termination Routing Scheme
12. Operator Price List (if appropriate)

3. Commencement and Duration

3.1 This Agreement takes effect on the date hereof and shall continue until:

3.1.1 the Operator ceases to be authorised to provide an electronic communications network or electronic communications service, pursuant to the provisions of the Authorisation Regulations; or

3.1.2 termination pursuant to this Agreement.

4. Network Interconnect

4.1 Interconnection for switched Call services between the *eircom* Network and the Operator Network will be achieved through one or more Interconnect Links. Each Interconnect Link will identify a connection between one of the *eircom* Interconnect Nodes and one of the Operator Interconnect Nodes. Details of how this shall be achieved are set out in the Network Plan. Interconnect is available at all *eircom* primary, tandem and national tertiary nodes and the Operator may interconnect at any of these nodes subject to that Interconnect Link being bi-laterally agreed in the Network Plan as defined in clause 10 hereof. The technical standards supported by the *eircom* network for the purposes of Interconnect are set out in the Technical Manual as amended from time to time.

4.2 Interconnect Paths will be provided using either Customer Sited Interconnect, In Span Interconnect or via Transport Links (as described in Service Schedules 001, 002, 005) in accordance with this Agreement.

4.3 The actual Point of Interconnect shall be where the *eircom* Network connects with the Operator Network and shall be a physical point where the connection can be disconnected in order to conduct testing. Each Party shall be wholly responsible for providing sufficient capacity on an appropriate transmission medium from the Point of Interconnect to meet the agreed forecasted requirements in the Network Plan. Each Party shall be wholly responsible for the operation and maintenance of this transmission medium.

4.4 Separate Interconnect Paths shall be provided to carry the traffic of each Party. Each individual Service Schedule included in this contract will identify whose Interconnect Paths shall be utilised. The cost of both installation and ongoing maintenance of each Interconnect Path shall be borne in full by the Party owning the traffic on that Interconnect Path. A price schedule for Interconnect Paths is as set out in the eircom RIO Network Price List. In the event of insufficient capacity for *eircom* owned traffic, the Operator may decide that Operator owned capacity be converted to bi-directional and carry the traffic of both Parties for a limited period until sufficient capacity is delivered. For the period that the Interconnect Paths are bi-directional, a retrospective adjustment will be made to the Interconnect Path rental charges to distribute these charges between the Parties based on carried minutes per month.

4.5 The ordering periods for new Interconnect Paths shall be as defined in Service Schedule 002 to this Interconnect Agreement.

5. Interconnect Services

5.1 The Service Schedules attached to this document at Annex C provide detail on the services which either *eircom* or the Operator provide on the Interconnect.

5.2 For the avoidance of doubt and notwithstanding the Interconnect between the *eircom* Network and the Operator Network neither Party shall hand over to the other Party, nor have an obligation to convey Calls of any category, unless the other Party has agreed to convey Calls of that category and there is express provision to convey Calls of that category in a Service Schedule.

5.3 The Interconnect Paths Service Level Agreement published on eircom's wholesale website provides details on the timescales for delivery of services and the in service quality standards provided.

6. Charging for Interconnect Services

6.1 The charging structure for each Interconnect Service is described in detail in the Service Schedules attached at Annex C. Charges applicable for each service type are as published in the *eircom* RIO Price List and/or the eircom RIO Network Price List on the eircom website The method of reviewing the charges given in the *eircom* RIO Price List and/or the eircom RIO Network Price List is described in clauses 21 and 29 hereof.

6.2 The chargeable time for each Call, unless specifically stated as otherwise, shall be the "conversation time" in accordance with Section 1.2.2 of CCITT Recommendation D.150 (version Mar del Plata, 1968; amended at Melbourne, 1988).

6.3 Save as may be otherwise provided in a Schedule at Annex C hereof**,** charges shall not be payable under this Interconnect Agreement by either Party to the other for the conveyance of a Call if the Call is not connected when there is a "ring" tone with no reply, an "engaged" tone, an "number unobtainable" tone or a "network information recorded announcement". For the avoidance of doubt neither customer nor network voice-mail systems shall be regarded as a "network information recorded announcement".

7. New Services

7.1 Either Party to this Interconnect Agreement may, at any time, request from the other Party an agreement to interconnect their respective Networks for the provision of any service or facility which the other Party provides under Interconnect Agreements with other Operators.

7.2 Following a request pursuant to clause 7.1, the other Party shall offer to enter into an Interconnect Agreement for the provision of the service or facility on its then current standard terms. For the avoidance of doubt, if the other Party

is not *eircom* then it shall not be obliged to provide any service on standard terms.

7.3 If a Party requests from the other Party an agreement for interconnection for the provision of a service which the Requested Party does not make available to third parties, but the Requested Party is obligated to provide such a service, the Requested Party shall enter into good faith negotiations for the provision of such service.

7.4 The Requesting Party shall provide the Requested Party with a written statement of its requirements at the time of its request, the Requested Party shall acknowledge receipt of such requests not later than five Working Days after receipt.

7.5 Not later than one (1) month, unless otherwise agreed by the Parties, after receipt of statement of requirements, the Requested Party shall confirm whether the statement of requirements is sufficient. If not, the Requested Party shall request any further clarification it may reasonably require.

7.6 Subject to the Requesting Party's statement of requirements being sufficient, the Requested Party shall confirm in writing whether it accepts an obligation to enter into an agreement not later than two (2) months after the receipt of the statement of requirements unless otherwise agreed by the Parties.

7.7 If it does accept an obligation to do so, the Requested Party shall endeavour to agree the technical and commercial aspects of interconnection within 75 calendar days after receipt of the statement of requirements unless otherwise agreed by the Parties.

7.8 If the Requested Party does not accept an obligation, a Dispute may be deemed to have arisen between the Parties and the Parties may invoke the provisions of clause 17 hereof. Negotiations to agree terms for interconnection may nevertheless continue pending resolution of the Dispute.

7.9 If the Requested Party is obliged to publish a Reference Interconnect Offer and the request is for a new interconnect service, the agreed technical and commercial terms will be incorporated into a revision to this Reference Interconnect Offer and submitted to the National Regulator for approval. *eircom* will automatically develop, in conjunction with Third Party Operators, Service Level Agreement for the new Interconnect Service where appropriate.

7.10 *eircom* shall offer new interconnection services and elements to other OAOs with such notice that the OAOs can order and have the new service delivered by eircom at the time that the associated retail service is launched by either eircom or the OAO that initiated the development of the new service. In all cases this will be no less than two weeks and at least equal to the provisioning time of the new interconnection service, to be approved or determined on a service by service basis by the National Regulator. The timescales could be extended by the National Regulator in exceptional circumstances.

8. Measurement of Traffic

8.1 The responsibility for traffic measurement shall reside with the Billing Party responsible for that particular Interconnect Service.

8.2 Each Party shall ensure that it records measurements of traffic in sufficient detail to meet its obligations as outlined in the Service Schedules attached hereto at Annex C and Annex B.

9. Billing and Payment

9.1 Each Party shall bill and reimburse the other Party in accordance with the procedures outlined in Annex B.

9.2 Charges shall be payable by one Party to the other provided such charges are specifically referred to in this Interconnect Agreement.

9.3 The charges in this Interconnect Agreement are exclusive of VAT unless such charges are stated to be inclusive of VAT. However VAT will be charged on invoices resulting from this Interconnect Agreement.

9.4 Invoices are due and payable in EURO. Invoices are payable within 30 calendar days from the date of issue of the invoice.

9.5 Each Party shall provide to the other, invoices of all amounts due to it, calculated in accordance with the provisions of the Services Schedules in Annex C hereof and the applicable price lists.

10. Network Design and Planning

10.1 Network design and planning of the Network Interconnect between the Parties is as outlined in the Network Plan. The Network Plan shall cover the next 3 planning years.

10.2 The Network Plan shall be reviewed and updated by the Parties on an annual basis and agreed by both Parties by the end of October of each year. However, it may be necessary to review and agree the Network Plan at other intervals as well to comply with and implement directions or requirements of the National Regulator.

10.3 The planning year shall be from April 1st to March 31st in each year.

10.4 During the first year of operation by the Operator, there shall be a mid year review of the Network Plan which shall be completed within 6 months of signature of this Interconnect Agreement.

10.5 In addition to the production of the Network Plan, the Parties will revise the forecasts for existing Interconnect Links on a quarterly basis as provided for in the Interconnect Operations and Maintenance Manual.

10.6 The forecasts provided between the Parties represent the good faith expectations of the Parties of their capacity requirements on the Interconnect. In the event that actual capacity activation should be less than that forecast, the penalty regime as set out in the Interconnect Paths Service Level Agreement shall apply. In the event that one Party should request activation of capacity beyond that forecasted, the other Party shall use reasonable endeavours to meet this requirement but cannot guarantee to meet this requirement.

11. Network Alteration and Data Management Amendment

11.1 "Either Party (in this clause 11.1, the "Requesting Party") may request the other Party (the "Requested Party") to make Network Alterations. At least 8 weeks notice shall be provided by the Requesting Party for each Network Alteration request. The Requested Party shall, if in a position to accept the Network Alteration proposed, provide an estimate of the cost involved within four weeks of receipt of a Network Alteration request. Network Alterations shall be carried out within the timescales to be agreed by the Parties and the cost of implementing such Network Alterations shall be borne solely by the Requesting Party. If a Requested Party believes that it could not proceed with a requested Network Alteration, either within the timescales requested by the Requesting Party or in any circumstances, the Requesting Party shall be so advised within 2 weeks of receipt of the request. In these circumstances the Parties shall make all reasonable efforts to resolve the situation, including recourse to the dispute resolution process as per Clause 17 hereof.

11.2 Either Party (in this clause 11.2, the "Requesting Party") may request the other Party (the "Requested Party") to make Data Management Amendments. The Parties shall endeavour to minimise the number of Data Management Amendments in each other's Network by minimising the level of digit analysis carried out in their respective Networks to that required to ensure efficient call routing and provide agreed Billing Information. In order to ensure the timely implementation of Data Management Amendments, notice of Data Management Amendments shall be provided by the Requesting Party at least 3 weeks in advance of the requested implementation date.

11.3 The following Data Management Amendments shall be carried out free of charge to the other Party and within 3 weeks of the request referred to in clause 11.2:-

(a) Any Data Management Amendment required to activate number ranges allocated or amended by the National Regulator.

(b) Any Data Management Amendment required for route management purposes which the parties agree is necessary for the efficient operation of Interconnect.

(c) Any Data Management Amendment which is jointly agreed to be of mutual benefit to both Parties or of a financial benefit to the Requested Party.

11.4 For all other Data Management Amendments, the Requested Party shall, if in a position to accept the Data Management Amendment proposed, advise the Requesting Party of the charge for implementing the requested amendment within 2 weeks of receipt of a request. The charges for such a Data Management Amendment shall be as set out in Service Schedule 302 in *eircom*'s RIO Price List. The Requested Party shall implement the Data Management Amendment within 3 weeks of the Requesting Party agreeing to pay such charge.

11.5 If a Requested Party reasonably believes that, having regard to regulatory or technical considerations, it is not practicable for it to proceed with any requested Data Management Amendment, either within the time-scales requested or in any circumstances, the Requesting Party shall be advised within 2 weeks of receipt of the request.

11.6 The Requesting Party is solely responsible for the accuracy of information contained in Data Management Amendment requests. The Requested Party may charge for Data Management Amendments which are requested to amend and/or correct previously implemented Data Management Amendments where such correction and/or amendments are necessary as a result of inaccurate or incomplete information provided by the Requesting Party. The charges for such a Data Management Amendment shall be as set out in Service Schedule 302 in *eircom*'s RIO Price List.

11.7 The Parties shall use reasonable endeavours to resolve any Dispute in relation to any requested Data Management Amendments including by recourse to the dispute resolution process set out in clause 17."

12. Network Safety and Protection

12.1 Each Party is responsible for the safe operation of its Network and shall take all reasonable and necessary steps in its operation and implementation of this Interconnect Agreement to ensure that its Network does not:

12.1.1 endanger the safety or health of employees, contractors, agents or customers of the other Party; or

12.1.2 damage, interfere with or cause any deterioration in the operation of the other Party's Network.

12.2 Neither Party shall connect or knowingly permit the connection to its Network of any equipment or apparatus, including, but not limited, to any

terminal equipment that is not approved by the relevant approvals authority for attachment to its Network.

13. Numbering

13.1 Each Party shall use numbers in accordance with the Irish national numbering scheme including the National Numbering Conventions and shall comply with the numbering provisions in the Network Plan.

13.2 CLI shall be used for presentation purposes in accordance with the Calling Line Identification (CLI) Code of Practice as published on the eircom wholesale website as agreed with the National Regulator following negotiations with industry if appropriate. Where CLI is passed for presentation purposes, the presentation shall comply with all the requirements of the relevant data protection legislation and regulation and those of individual customers of the Parties.

14. Quality of Service

14.1 The Parties shall use their reasonable endeavours to meet the performance standards as specified in the Interconnect Operations and Maintenance Manual.

15. Provisioning, Operation and Maintenance

15.1 The procedures for the installation and testing of the initial Interconnect as well as for the continued operation and maintenance thereof shall be governed by the provisions of the Interconnect Operations and Maintenance manual.

16. Provision of Information

16.1 Subject to a Party's obligations of confidentiality to Third Parties, a Party may request and the other Party shall provide information on protocols in use by that other Party which are required for interconnection, conveyance of Calls or the provision of services specified in this Interconnect Agreement if such other Party has relevant information and the provision of such information is necessary as a consequence of the absence or incompleteness of international standards.

16.2 Notwithstanding any provision of this Interconnect Agreement a Party shall not be obliged to provide information which is subject to a confidentiality obligation to a Third Party unless such Third Party consents to such disclosure.

16.3 The Disclosing Party will use reasonable endeavours to ensure that information disclosed is correct to the best of its knowledge at the time of provision of such information.

16.4 If a Disclosing Party provides information to a Receiving Party, the Disclosing Party shall have obtained all appropriate Third Party consents.

16.5 Subject to clause 23 hereof, the Receiving Party shall indemnify the Disclosing Party and keep it indemnified against all liabilities, claims, demands, damages, costs and expenses arising as a consequence of any failure by the Receiving Party to comply with any conditions imposed and identified, including those relating to confidentiality as per Clause 19, by the Disclosing Party or any third party at the time when the information was provided.

16.6 Nothing in this Interconnect Agreement shall require a Party to do anything in breach of any statutory or regulatory obligation of confidentiality, including without prejudice to the generality of the foregoing, any obligation pursuant to Irish or European Union data protection legislation or regulation.

17. Resolution of Disputes

17.1 Each Party shall use its reasonable endeavours to resolve any Disputes between them concerning the implementation, application or interpretation of this Interconnect Agreement, excluding those covered by Annex B, in the first instance through negotiation between the parties through the normal contacts, hereinafter referred to as Level 1.

17.2 In the event of the Parties failing to resolve the dispute at Level 1 Negotiation within 2 weeks either Party shall have a right to invoke the dispute procedures specified herein on the service of notice to that effect upon the other Party. The Party serving the notice (the Disputing Party) shall include with such notice all relevant details including the nature and extent of the Dispute

17.3 Upon service of such notice the Dispute shall be escalated to Level 2. The parties shall consult at Level 2 in good faith to endeavour to resolve the Dispute.

17.4 If the endeavours of the parties to resolve the Dispute at Level 2 are not successful within 2 weeks of escalation of the Dispute to Level 2, either party may upon service of notice to the other escalate the Dispute for determination by the National Regulator, hereinafter referred to as Level 3. All relevant details with regard to the nature and extent of the Dispute shall be furnished to the National Regulator together with a record of matters which have been agreed or not agreed at Levels 1 and 2.

17.5 The name of each party's liaison contact and representative at each level of consultation shall be as specified in the clause 25. No change to a liaison contact or representative shall be effective until it has been notified to the other party.

17.6 The time limits specified at paragraphs 17.2 and 17.4 above may be extended by mutual agreement between the parties.

17.7 The above procedures are without prejudice to any rights and remedies that may be available to the Parties in respect of any breach of any provision of this Interconnect Agreement.

17.8 Nothing herein contained shall prevent a Party from:

(a) seeking (including obtaining or implementing) interlocutory or other immediate or equivalent relief; or

(b) automatically referring the dispute to the National Regulator without recourse to Level 1 or Level 2 Negotiation in accordance with any right (if any) either Party may have to request a determination or other appropriate steps for its resolution. Without prejudice to the foregoing each Party undertakes to avail of the Level 1 and Level 2 procedures set out herein, prior to referring the dispute to the National Regulator save in exceptional circumstances.

18. Breach, Suspension and Termination

18.1 If one Party's Network adversely affects the normal operation of the other Party's Network, or is a threat to any person's safety, the other Party may suspend, to the extent necessary, such of its obligations hereunder, and for such period as it may consider reasonable to ensure the normal operation of its Network or to reduce the threat to safety.

18.2 If a Party is in material breach of this Interconnect Agreement (excluding failure to pay an undisputed sum due hereunder which is subject to Clauses 18.15 through to 18.20), the other Party may serve a written notice (the "breach notice") on the Party in breach specifying the breach and requiring it to be remedied within:

18.2.1 30 calendar days from the date of receipt of such breach notice; or

18.2.2 in case of emergency (excluding financial obligations) within such shorter period as the Party not in breach may reasonably specify.

18.3 If the Party in breach fails to remedy the breach within such period as may be specified by the Party not in breach pursuant to clause 18.2 the Party not in breach may, until such breach is remedied, suspend performance of such of its obligations under this Interconnect Agreement as is reasonable in the circumstances.

18.4 If the Party in breach fails to remedy the breach within the period stated in the breach notice, the Party not in breach may terminate this Interconnect Agreement on three months' written notice provided always that if the Party in breach remedies the breach within such three months' notice period, this Interconnect Agreement shall not terminate as a result of such notice.

18.5 This Interconnect Agreement may be terminated by either Party by written notice forthwith (or on the termination of such other period as such notice may specify) if the other Party:

18.5.1 is unable to pay its debts within the meaning of the Companies Acts 1963 - 2001; or

18.5.2 has a Receiver or Examiner appointed or has been subject to an application for the appointment of a Receiver or an Examiner in relation to all or any of its assets or an encumbrancer has taken possession of all or a material part of its assets; or

18.5.3 has an order made or a resolution passed for its winding up (other than for the purpose of amalgamation or reconstruction); or

18.5.4 enters into a voluntary arrangement with creditors under the Companies Acts 1963 - 2001; or

18.5.5 ceases to carry on business.

18.6 Either Party may terminate this Interconnect Agreement by giving at any time to the other not less than 24 months written notice to terminate.

18.7 After a notice has been given pursuant to clause 18.6 a Party may request the other Party to carry on good faith negotiations with a view to entering into a new agreement.

18.8 Following a request pursuant to clause 18.7, if, on termination of this Interconnect Agreement either Party would be obliged under its Authorisation to enter into a new interconnection agreement with the other Party then the Parties shall carry on good faith negotiations with a view to entering into a new agreement to take effect on termination of this Interconnect Agreement.

18.9 Upon termination or expiry of this Interconnect Agreement each Party shall take such steps and provide such facilities as are necessary for recovery by the other Party of equipment (if any) supplied by that other Party. Each Party shall use reasonable endeavours to recover equipment made available by it.

18.10 If 30 calendar days after the termination or expiry of this Interconnect Agreement, a Party fails to recover equipment in good condition (fair wear and tear excepted) because of the acts or omissions of the other Party (or a Third Party appearing to have control of a site where such equipment is situated) the first Party may demand reasonable compensation from the other Party which shall be paid by the other Party within 10 calendar days of the date of the demand.

18.11 Without prejudice to a Party's rights upon termination or expiry of this Interconnect Agreement, a Party shall refund to the other a fair and equitable proportion of those periodic sums (if any) paid under this Interconnect Agreement for a period extending beyond the date of such termination or expiration.

18.12 Termination or expiry of this Interconnect Agreement shall not be deemed a waiver of a breach of any term or condition of this Interconnect Agreement and shall be without prejudice to a Party's rights, liabilities or obligations that have accrued prior to such termination or expiry.

18.13 Notwithstanding the termination or expiry of this Interconnect Agreement clause 16, 18.9, 18.10, 18.11, 20, 21 and 24 inclusive shall continue in full force and effect for a period of six (6) years from the date of termination or expiry unless otherwise agreed by the Parties.

18.14 Each of the Parties' right to terminate or suspend performance of this Interconnect Agreement pursuant to this clause 18 is without prejudice to any other rights or remedies available to either Party. In particular nothing contained herein shall prevent a Party who has been served with a breach notice pursuant to clause 18.2 hereof (and who is of the reasonable opinion that no such material breach has occurred) referring the matter to the National Regulator for determination. The Parties shall use their best

endeavours to ensure that the National Regulator shall determine the issue as expeditiously as possible after hearing submissions and representations from both Parties. The remedies available to the Party alleging a breach under this clause 18 by the other Party shall not be exercised by it pending adjudication on the matter by the National Regulator.

18.15 In the event either Party fails to remit payment for services under this Agreement in accordance with the provisions of Annex B, Billing and Payment, such failure shall constitute a material breach ("Payment Breach") and the non-breaching Party shall be entitled to issue a breach notice requiring this breach to be remedied within ten (10) calendar days or such longer time as the non-breaching Party may deem reasonable under the circumstances save for circumstances governed by sub-clause 18.20.

18.16 If the breaching Party remedies the breach within the period set out in Clause 18.15 the non-breaching Party shall not terminate the Agreement provided that Clause 18.20 does not apply.

18.17 In the event the breaching Party fails to remedy the Payment Breach within the time provided in the breach notice, the non-breaching Party may initiate credit vetting as defined in clause 19 of this agreement. The purpose of this vetting is to establish whether the non-payment is likely to cause a specific financial risk to the non-breaching party, due to the financial circumstances of the breaching party.

18.18 If justified by credit vetting, the non-breaching party may request a financial security guarantee following the principles outlined in clause 19.

18.19 Failure (within the time specified in Clause 19) or refusal (at any time) by the breaching party to provide a financial guarantee shall give the non-breaching party the right to terminate the agreement with 30 days' notice.

18.20 If, following the service of three previous breach notices, a Party is in Payment Breach on a fourth occasion during a twenty-four month period, this Agreement may be terminated by the non-breaching Party by the service of a written notice of termination on the Party in breach. Termination shall take effect thirty (30) days from the date of issue of the notice. Termination may be effected regardless of whether or not the Payment Breach is remedied during this period. The payment obligations survive termination.

19. Credit Assessment and Credit Risk Management

19.1 *eircom* may carry out credit vetting of a prospective Operator prior to establishing an Interconnect Agreement. The method to be used by eircom will be communicated to the Operator and will be applied consistently to all Operators.

19.2 Should the result of the credit vetting of a prospective Operator confirm that the provision of interconnect service poses a financial risk which is greater than can be controlled by a credit limit (which *eircom* shall justify), *eircom* has the right to request a form of financial security. The level of security

requested shall be proportional to the risk involved. The level of security shall take account of factors such as the estimated value of services to be provided, and the projected liability. The financial security may be provided by a means such as bank deposit or guarantee, and *eircom* shall not unreasonably refuse to accept any other form of financial guarantee proposed by the Operator. The financial security will be subject to quarterly review during the first year of operation. Thereafter, the review procedures relating to Operators set out in Clause 19.4 shall apply. Failure to provide a suitable guarantee within 30 days (or such longer period as *eircom* may reasonably allow) will be sufficient reason to prevent this Agreement coming into force.

19.3 *eircom* may carry out credit vetting of an existing Operator where *eircom* has reasonable concern about the ability of the Operator to cover debts including without limitation where *eircom* has evidence of a poor payment history or the Operator's credit rating has been downgraded or threatened to be downgraded. The method to be used will be communicated to the Operator and will be standard to all Operators.

19.4 Should the result of credit vetting of an existing Operator confirm the existence of a financial risk, *eircom* has the right to request a form of financial security. The level of security requested shall be proportional to the risk involved and shall take due account of historic levels of interconnection payments, liability, payment frequency and credit terms. The financial security may be provided by a means such as bank deposit or guarantee, and *eircom* shall not unreasonably refuse to accept any other form of financial guarantee proposed by the Operator. The financial security will be subject to quarterly review and will be removed or reduced where the security or its level is no longer justified. *Eircom* reserves the right to treat failure to provide an agreed security within 30 days (or such longer period as *eircom* may reasonably allow) of the date of *eircom's* request as a breach of this Agreement.

19.5 A financial security (including one sought as part of default procedures set out in clause 18) may only be required by *eircom* where *eircom* has assessed credit risk in accordance with Clause 19.2 or 19.4.

19.6 Should an existing Operator have reasonable concern about the ability of eircom to cover debts, the Operator may carry out credit vetting. Should the result of credit vetting confirm the existence of a financial risk, the Operator has the right to request a form of financial security. The principles to be followed are as set out in Clause 19.4.

19.7 For avoidance of doubt, any disputes relating to credit vetting and credit management shall be subject to the conditions set out in Clause 17 of this Agreement.

20. Confidentiality

20.1 The Parties agree to treat as confidential all confidential information defined as such in the Non Disclosure Agreement.

20.2 The contents of this Interconnect Agreement, either in one or more parts or in its entirety, may not be divulged to any Third Party, with the exception of the National Regulator, without the written consent of both Parties.

21. Intellectual property rights

21.1 Except as expressly otherwise provided in this Interconnect Agreement, Intellectual Property Rights shall remain the property of the Party creating or owning the same and nothing in this Interconnect Agreement shall be deemed to confer any assignment or right or title whatsoever or licence of the Intellectual Property Rights of one Party to the other Party, and nothing in this Agreement shall be deemed to restrict the rights of any Party to own, use, enjoy, licence, assign or transfer its own Intellectual Property.

22. Review

22.1 A Party may seek to amend this Interconnect Agreement by serving on the other a review notice if:

22.1.1 either Party's authorisation is materially modified (whether by amendment or replacement); or

22.1.2 a material change occurs in the law or regulations (including codes of practice whether or not having the force of law) governing electronic communications in Ireland or the EU; or

22.1.3 this Interconnect Agreement makes express provision for a review or the Parties agree in writing that there shall be a review; or

22.1.4 a material change occurs, including enforcement action by any regulatory authority, which affects or reasonably could be expected to affect the commercial or technical basis of this Interconnect Agreement; or

22.1.5 this Interconnect Agreement is assigned or transferred by the other Party except if prior written consent to the assignment or transfer is not required under Clause 24 hereof; or

22.1.6 there is a general review pursuant to clause 22.3 hereof.

22.2 A review notice shall set out in reasonable detail the issues to be discussed between the Parties.

22.3 A Party may initiate a general review of this Interconnect Agreement by serving a review notice during the period of three months commencing on 1st October in any year.

22.4 The charges set out in the *eircom* RIO Price List, Eircom RIO Network Price List and Switched Routing Transit and Price List and contained in the Operator Price List for the Interconnect Services which are set out in the attached Service Schedules at Annex C shall, in any case, be reviewed on an annual basis commencing on 1st October in any year.

22.5 On service of a review notice, the Parties shall forthwith negotiate in good faith the matters to be resolved with a view to agreeing the relevant amendments to this Interconnect Agreement.

22.6 For the avoidance of doubt, the Parties agree that notwithstanding service of a review notice this Interconnect Agreement shall remain in full force and effect.

22.7 If the Parties fail to reach agreement on the subject matter of a review notice within 3 calendar months (the relevant period) in each case from the date of service of such review notice, either Party may, not later than one calendar month after the expiration of the relevant period, request in writing the National Regulator to determine:

22.7.1 the matters upon which the Parties have failed to agree;

22.7.2 whether this Interconnect Agreement should be modified to take account of such matters; and, if so

22.7.3 the amendment or amendments to be made.

22.8 The Parties shall enter into an agreement to modify or replace this Interconnect Agreement in accordance with what is agreed between the Parties to conform with the National Regulator's determination.

22.9 The Parties may, at any time, agree in writing a variation to the time periods specified above in relation to a particular review notice.

23. Force Majeure

23.1 Neither Party shall be liable to the other Party for any delay in or failure to perform its obligation under this Interconnect Agreement caused by a Force Majeure Event. For such purposes a "Force Majeure Event" means any event beyond the reasonable control of a Party, including act of God, insurrection or civil disorder, war or military operations, national or local emergency, acts or omissions of government, highway authority or other competent authority, compliance with any statutory, regulatory or legal obligation, industrial disputes of any kind (whether or not involving either Party's employees), fire, lightning, explosion, flood, subsidence, weather of exceptional severity, acts or omissions of persons for whom neither Party is responsible or any other cause whether similar or dissimilar outside its reasonable control.

23.2 The Party initially affected by a Force Majeure Event shall promptly notify the other of the circumstances in question and their effect on the performance of obligations under this Interconnect Agreement, and the estimated extent and duration of its inability to perform or delay in performing its obligations ("Force Majeure Event notification").

23.3 Upon cessation of the service effects of the Force Majeure Event the Party initially affected by a Force Majeure Event shall promptly notify the other of such cessation.

23.4 If as a result of a Force Majeure Event, the performance by the Party, initially affected, of its obligations under this Interconnect Agreement is affected, such Party shall, subject to the provisions of clause 22.6, perform those of its obligations not affected by a Force Majeure Event. In performing those of its obligations not affected by a Force Majeure Event, the Party initially affected by a Force Majeure Event shall deploy its resources such that (when taken together with other obligations to its customers and Third Parties) there is no undue discrimination against the other Party.

23.5 To the extent that a Party is prevented as a result of a Force Majeure Event from providing all of the services or facilities to be provided under this Interconnect Agreement, the other Party shall be released to the equivalent extent from its obligations to make payment for such services or facilities or complying with its obligations in relation thereto.

23.6 Following a Force Majeure Event notification and if the effects of such Force Majeure Event continue for:

23.6.1 a continuous period of not more than 6 months from the date of the Force Majeure Event notification (whether or not notice of cessation has been given pursuant to clause 22.3) any obligation outstanding shall be fulfilled by the Party initially affected by the Force Majeure Event as soon as reasonably possible after the effects of the Force Majeure Event have ended, save to the extent

that such fulfilment is no longer possible or is not required by the other Party;

23.6.2 a continuous period of 6 months or more from the date of the Force Majeure Event notification (and notice of cessation has not been given pursuant to clause 22.3), the Party receiving the Force Majeure Event notification shall be entitled (but not obliged) to terminate this Interconnect Agreement by giving not less than 30 working days written notice to the other Party, provided that such notice shall be deemed not to have been given if notice of cessation is received by the Party receiving the Force Majeure Event notification prior to the expiry of the 30 working days notice. If this Interconnect Agreement is not terminated in accordance with the provisions of this clause 22.6.2, any obligations outstanding shall be fulfilled by the Party initially affected by the Force Majeure Event as soon as reasonably possible after the effects of the Force Majeure Event have ended, save to the extent that such fulfilment is no longer possible or is not required by the other Party.

24. Limitation of Liability

24.1 Neither Party has an obligation of any kind to the other Party beyond an obligation to exercise the reasonable skill and care of a competent electronic communications operator in performing its obligations under this Interconnect Agreement.

24.2 Subject to clause 23.4, if a Party is in breach of any of its obligations under this Interconnect Agreement to the other Party (excluding obligations arising under this Interconnect Agreement to pay moneys in the ordinary course of business), or otherwise (including liability for negligence or breach of statutory duty) such Party's liability to the other shall be limited to one and a quarter million EUROs (€ 1,250,000) for any one event or series of connected events and two and a half million EUROs (€ 2,500,000) for all events (connected or unconnected) in any period of 12 calendar months.

24.3 Neither Party shall be liable to the other in contract, tort (including negligence or breach of statutory duty) or otherwise for loss (whether direct or indirect) of profits, business or anticipated savings, wasted expenditure or for any indirect or other consequential loss whatsoever arising in connection with the operation of this Interconnect Agreement, howsoever caused.

24.4 Each provision of this clause 23 is a separate limitation applying and surviving even if one or more such provisions is inapplicable or held unreasonable in any circumstances.

25. Assignment of Rights and Obligations

25.1 Unless otherwise agreed in writing, and subject to clause 24.2, no rights, benefits or obligations under this Interconnect Agreement may be assigned or transferred, in whole or in part, by a Party without the prior written consent of the other Party.

25.2 No consent is required under clause 24.1 for an assignment of rights, benefits or obligations under this Interconnect Agreement (in whole or in part) to a successor to all or substantially all of the assigning Party's Network to an associated company provided that such successor or Associated Company is authorised under the Authorisation Regulations, to operate the Network of the assigning Party.

25.3 The assigning Party shall promptly give notice to the other Party of any assignment permitted to be made without the other Party's consent. No assignment shall be valid unless the assignee/successor agrees in writing to be bound by the provisions of this Interconnect Agreement.

26. Notices

26.1 A notice shall be duly served if:

26.1.1 delivered by hand, at the time of actual delivery;

26.1.2 sent by facsimile, upon its receipt being confirmed;

26.1.3 sent by recorded delivery post, 4 calendar days after the day of posting.

26.2 Except if otherwise specifically provided all notices and other communications relating to this Interconnect Agreement (Level 1) shall be in writing and shall be sent as follows:

If to the Operator:

Contact,	Telephone	01 xxxxxxx
Address,	Facsimile	01 yyyyyyy
Address,		
Address,		

If to *eircom*:

Wholesale Contracts Manager	Telephone	01 7011209
Wholesale	Facsimile	01 4752522
eircom		
St. Stephen's Green West		
Dublin 2		

or to such other addresses as the Parties may notify from time to time pursuant to this clause 26.

26.3 The level 2 escalation points within the Parties in relation to resolution of Disputes shall be as follows;

If to the Operator:

Contact	Telephone	01 xxxxxxx
Address,	Facsimile	01 yyyyyyy
Address,		
Address,		
Address,		
Address		

If to *eircom*:

Head Of Wholesale Regulatory Operations,	Telephone	01 6714444
eircom	Facsimile	01 4752522
St. Stephen's Green West		
Dublin 2		

27. Entire Agreement

27.1 This Interconnect Agreement represents the entire understanding of and agreement between the Parties in relation to the subject matter of this Interconnect Agreement, and, unless otherwise agreed in writing, supersedes all previous understandings, commitments, agreements or representations whatsoever, whether oral or written.

28. Waiver

28.1 The waiver of any breach of, or failure to enforce, any term or condition of this Interconnect Agreement shall not be construed as a waiver of any other term or condition of this Interconnect Agreement. No waiver shall be valid unless it is in writing and signed on behalf of the Party making the waiver.

29. Severability

29.1 The invalidity, unenforceability of any provision of this Interconnect Agreement shall not affect the validity or enforceability of the remaining provisions of this Interconnect Agreement.

30. Amendments

30.1 Any amendments to the *eircom* RIO pursuant to directions issued by the National Regulator: -

- in relation to the setting / adjustment of *eircom* prices in the *eircom* RIO Price List and/ or the *eircom* Network Price List;
- the text change process contained in Decision Notice D10/02; and

- any other directions, decisions, determinations, specific obligations, obligations, measures and requirements of the National Regulator relating to the *eircom* RIO

shall be deemed to be automatically incorporated into this Interconnect Agreement with immediate effect from the date the directions have been issued by the National Regulator.

30.2 Any amendments to the *eircom* RIO under this Interconnect Agreement for the inclusion of new RIO services pursuant to directions issued by the National Regulator and, amendments to Operator prices excluding those specified in Clauses 30.4 and 30.5 shall, in order to be valid, be in writing, dated and signed by both Parties. Such amendments and supplements shall not affect the validity or enforceability of any of the remaining provisions of this Interconnect Agreement. Amendments to the *eircom* RIO for inclusion of new RIO services shall continue to follow the process set out in Clause 7 of the RIO.

30.3 Notwithstanding Clause 30.1, in the context where eircom has reciprocal obligations with an OAO, the automatic incorporation of changes in the Interconnect Agreement shall apply to eircom's obligations only.

30.4 Amendments and/or modifications to the *eircom* Switched Transit Routing and Price List shall not be subject to the requirements of Clause 30.2. Amendments, changes and/or modifications to the *eircom* Switched Transit Routing and Price List shall be effective and binding upon the Operator in accordance with the terms and conditions of published Service Schedule 104 provided the processes for price changes and the introduction of new services as set out in Appendix 1 of the *eircom* Switched Transit Routing and Price List are complied with. Such changes shall not require separate written agreement between the parties to take effect.

30.5 In the context of Number Translation Codes, amendments, changes and/or modifications to the Operator Price List shall not be subject to the requirements of Clause 30.2 where expressly provided in the Service Schedule and provided the Parties follow the processes in Appendix 1 of the Operator Price List.

31. Relationship of Parties

31.1 The relationship between the Parties is that of independent contractors. Nothing in this Interconnect Agreement shall be construed to make either Party hereto an agent, joint venture or partner of or with the other. Neither Party is granted any right of authority or agency, expressly or implicitly, on behalf of, or in the name, of the other nor any right to legally bind the other in any manner whatsoever. Neither Party shall become liable through any representation, act or omission of the other which is contrary to or unauthorised by the provisions of this Interconnect Agreement.

32. Governing Law

32.1 The interpretation, validity and performance of this Interconnect Agreement shall be governed in all respects by the laws of Ireland and the Parties submit to the exclusive jurisdiction of the Irish Courts.

IN WITNESS WHEREOF THIS AGREEMENT WAS ENTERED INTO THE DAY AND YEAR FIRST ABOVE WRITTEN.

SIGNED for and on behalf of
the Operator:

_____
[SIGNATURE]

_____
[NAME (BLOCK CAPITALS)]

_____
[POSITION]

_____
[DATE]

SIGNED for and on behalf of
***eircom*:**

_____
[SIGNATURE]

_____
[NAME (BLOCK CAPITALS)]

_____
[POSITION]

_____
[DATE]

ANNEX A

DEFINITIONS

In this Interconnect Agreement, words and expressions have the following meanings:

"Access Regulations"	European Communities (Electronic Communications Networks and Services) (Access) Regulations 2003 (SI 305 of 2003).
"Accessible":	Locations and addresses at which either *eircom* currently provides standard fixed line telephony service, or which can be reached without difficulty.
"Actual Date of Delivery":	The date on which Interconnect Paths, Transport Links and End User Links actually come into service.
"Answer Signal":	The signal required by the call originating Network to indicate connection to the called party.
"Associated Company"	Is a Subsidiary and Holding Company of such Party, the terms Subsidiary and Holding Company having the meanings ascribed thereto in section 155 of the Companies Act 1963 – 2001 or any subsidiary of any such Holding Company.
"Authorisation Regulations"	European Communities (Electronic Communications Networks and Services) (Authorisation) Regulations 2003 (SI 306 of 2003).
"Bi-directional Interconnect Paths"	A bi-directional Interconnect Path is a 2Mbit/s Path that allows call traffic to physically be conveyed both from the eircom network towards the Operator network and from the Operator network towards the eircom network.
"Billing Information":	That information which must be provided by the Billing Party in support of invoices issued under this Interconnect Agreement as agreed by the Parties to enable the billed Party to validate an invoice.

"Billing Party":	The Party who is issuing any particular invoice.
"Billing Period":	The agreed intervals at which billing takes place under this Interconnect Agreement.
"Call":	A transmission path through telecommunications networks, PSTN or ISDN, for the sending of messages, and a reference to conveyance of a Call by a Party means the establishment by that Party of a transmission path through that Party's Network, PSTN or ISDN, and the conveyance by that Party in accordance with this Interconnect Agreement of a message (if any) over such transmission path.
"Call Origination"	A Call originated by a customer in one Network utilising the Carrier Access, Carrier Selection or Carrier Pre- Selection code assigned to an alternative network operator who will invoice the caller for the relevant charges associated with the Call.
"Catchment Area"	is the area served by an exchange and, in the case of tandem switches, the area also served by primary switches supported by that tandem. It is also used to indicate all subscriber numbers directly connected to a given exchange, and in the case of tandem switches, all numbers also connected to primary switches supported by that tandem.
"CLI":	Calling Line Identification as defined by the ITU-T.
"Commencement Date of Charging":	The date on which charging for an Interconnect Path, Transport Link and/or End User Links commences.
"Committed Uptake"	The level of Interconnect Paths the Party is financially committed to pay the respective Party for, regardless of whether or not the Interconnect Paths are actually ordered.
"Customer Number Range":	Any number range, either geographic or non geographic, from which individual numbers or groups of numbers are assigned to specific end user customers.

"Data Management Amendment": Such data reconfiguration of the *eircom* Network or the Operator Network as is necessary for the access, routing and charging of Calls;

"Default Interest Rate": Euribor + four (4%) (3 month rate) applied to amount in default.

"Disclosing Party": A Party disclosing information covered by this Interconnect Agreement.

"Dispute": **A**ny disagreement between the Parties in respect of the interpretation or resolution of any provision of this Interconnect Agreement (excluding breaches of this Interconnect Agreement).

"Due Date": A date which is 30 calendar days after the date of an invoice.

"*eircom* Call Origination Primary Charge":
The charge applied to Carrier Selection, Carrier Access and Carrier Pre Selection Calls which originates on a geographic number whose controlling switching centre in the *eircom* network is also the *eircom* Interconnect Node for that call.

"*eircom* Call Origination Tandem Charge":
The charge applied to Carrier Selection, Carrier Access and Carrier Pre Selection Calls which originates on a geographic number whose controlling switching centre in the *eircom* network is parented off the *eircom* Interconnect Node at which the call is delivered from the *eircom* Network.

"*eircom* Call Origination Double Tandem Charge": The charge applied to Carrier Selection, Carrier Access and Carrier Pre Selection Calls which originates on a geographic number whose controlling switching centre in the *eircom* network is not *eircom* the Interconnect Node or the controlling parent of the Interconnect Node at which the call is delivered from the *eircom* Network.

"*eircom* Interconnect Node": *eircom* switching centre from which Interconnect Services are offered.

"*eircom* International Access": Calls handed over from the Operator network for termination outside Ireland routed via the *eircom* network.

"*eircom* Local Exchange": The *eircom* exchange from which standard fixed line telephone service is provided to the location concerned.

"*eircom* National Termination": Calls handed over from the Operator network which terminate on geographic number ranges in the *eircom* network within Ireland.

"*eircom* National Termination Primary Charge":
The charge applied to a national termination Call which terminates on a geographic number whose controlling switching centre in the *eircom* network is also the *eircom* Interconnect Node for that Call.

"*eircom* National Termination Tandem Charge":
The charge applied to a national termination Call which terminates on a geographic number whose controlling switching centre in the *eircom* network is parented off the *eircom* Interconnect Node at which the Call is delivered to the *eircom* Network.

"*eircom* National Termination Double Tandem Charge": The charge applied to a national termination Call which terminates on a geographic number whose controlling switching centre in the *eircom* network is not the *eircom* Interconnect Node or the controlling parent of the Interconnect Node at which the Call is delivered to the *eircom* Network.

"*eircom* Network": The total infrastructure operated by *eircom* to provide electronic communications services.

"eircom RIO Network Price List" Sets out the Prices applicable to the network services provided by eircom, more particularly, Interconnect Paths, FRIACO Interconnect Paths, Transport Links and End User Links.

"*eircom* RIO Price List" Sets out the prices applicable for access to *eircom* services and *eircom* retention rates in accordance with the provisions of the

	(Electronic Communications Networks and Services) (Access) Regulations, 2003 (S.I. No. 305 of 2003) and any other applicable regulation.
"*eircom* Tertiary Interconnect Node":	An *eircom* tertiary (Gateway) switching centre from which Interconnect Services are offered.
"Framework Regulations"	European Communities (Electronic Communications Networks and Services (Framework) Regulations 2003 (SI 307 of 2003)
"Intellectual Property":	Any patent, copyright, design, trade name, trademark, service mark or other intellectual property right (whether registered or not) including without limitation ideas, concepts, know-how, techniques, designs, specifications, drawings, blueprints, tracings, diagrams, models and other information relating to any such intellectual property.
"Interconnect":	The connection of the *eircom* and Operator Networks for the conveyance of the electronic communications traffic outlined in Annex C.
"Interconnect Agreement"	The agreement between *eircom* and the Operator for the purposes of Interconnect which shall include all the documents listed in Clause 2.4 and the associated forms on the eircom wholesale website.
"Interconnect Link":	The connection between an *eircom* Interconnect Node and an Operator Interconnect Node. This connection may be uni-directional or bi-directional depending on an Operator's traffic requirements.
"Interconnect Network":	The combination of all the Interconnect Links between the two Parties which represents the totality of the connection of the two Networks.
"Interconnect Node Identifier":	A string that identifies the interconnect node in question for billing purposes.

"Interconnect Path": A single 2 Mbit/s circuit between an *eircom* Interconnect Node and an Operator Interconnect Node

"Interconnect Service": An electronic communications service for which agreement has been reached by the Parties to convey on the Interconnect.

"Interconnect Services": All Interconnect Services as detailed in Annex C.

"Interconnect Traffic": Electronic communications traffic conveyed between the Parties by way of Interconnect.

"Interconnect Usage Report": A report providing the Billing Information attached to each Interconnect Traffic invoice.

"Intra-building": The equipment necessary to terminate an Interconnect Path on an Interconnect Node and switch Interconnect Traffic.

"Main body": Clauses 1 through 32 of this Interconnect Agreement.

"National Regulator": The Commission of Communication Regulation or any person or body designated as the National Regulatory Authority pursuant to EC Council Directive 2002/21/EC.

"Network": The *eircom* Network or the Operator Network as the case may be.

"Network Alteration": A physical change within one Party's Network which is necessitated, to ensure continued efficient operation of the Interconnect, by a change made by the other Party to this Interconnect Agreement without bi-lateral agreement.

"Network Information Recorded Announcement": An announcement provided by *eircom* or the Operator which provides information to the calling party in relation to the digits dialled and the progress towards connection of the Call.

"Network Modification": A software change within one Party's Network which is necessitated, to ensure continued efficient operation of the

	Interconnect, by a change made by the other Party to this Interconnect Agreement without bi-lateral agreement.
"Network Plan":	Has the meaning ascribed to it in clause 10 hereof.
"**Non Disclosure Agreement**"	Means the Non Disclosure Agreement for Interconnection Services signed between the Parties on (to be inserted) which is incorporated into this Agreement.
"Number Unobtainable":	A tone provided by *eircom* or the Operator of the called Network in cases where the called number is not active.
"Operator"	The undertaking entering into this Interconnect Agreement with *eircom*.
"Operator Interconnect Node":	The Operator switching centre from which interconnect services are offered.
"Operator Network":	The total infrastructure operated by the Operator to provide electronic communications services.
Operator Price List	Sets out the prices applicable for access to certain Operator Services including but not limited to National Termination.
Other Authorised Operator [OAO]	An undertaking other than *eircom* which is authorised to provide electronic communications networks and/or services.
"Party":	A party to this Interconnect Agreement.
"Partial Private Circuits"	means the product offering directed in Decision Notice D17/02 as set out in the Partial Private Circuit Product Description comprising Transport Links and End User Links
"Point of Interconnect":	The point at which the *eircom* Network connects with the Operator Network on each Interconnect Path.
"PoP":	A PoP typically consists of transmission equipment and, where applicable, switching equipment and other resources which permit the conveyance of signals between

	defined termination points by wire, by radio by optical or other electronic means.
"Ready for Service date":	The date by which an ordered Interconnect Path or other activity requested by one Party of the other is requested to be available.
"Receiving Party":	A Party who received any information from the other Party in relation to the Interconnect or Interconnect Services.
"Requested Party":	The Party who has been requested by the other Party to carry out some activity in relation to the Interconnect, Interconnect Services or Partial Private Circuits.
"Requesting Party":	The Party who is requesting the other Party to carry out some activity in relation to the Interconnect, Interconnect Services or Partial Private Circuits.
"Service Schedules":	The schedules attached at Annex C which describe the Interconnect Services and the basis on which they are conveyed on the Interconnect.
"Third Party":	Any Party other than the Parties to this Interconnect Agreement.
"Third Party Operators":	All authorised Operators interconnected with *eircom* but not party to this Agreement.
"USO Regulations"	European Communities (Electronic Communications Networks and Services (Universal Service and Users' Rights) Regulations 2003 (SI 308 of 2003).
"Working Day":	The time between 09.00 – 17.00 on any day other than Saturdays, Sundays or Public Holiday as defined in the Second Schedule to the Organisation of Working Time Act, 1997.

ANNEX B

BILLING AND PAYMENT

INDEX

1	Definitions
2	Recording of Call Billing Information
3	Exchange of Call Billing Information
4	Transport Links, Interconnect Paths and End User Links Billing
5	Invoices
6	Payment
7	Disputes

This Annex B is effective from the date of signature of this Interconnect Agreement and shall remain in effect until amended following agreement of the Parties to such amendment.

1. Definitions

1.1 In this Annex, a reference to a clause or Appendix unless stated otherwise, is to a clause or Appendix of this Annex. Words and expressions have the meaning given in Annex A.

2. Recording of Billing Information

2.1 Subject to paragraph 2.2, each Party shall, for each individual Call for which it is the Billing Party collect, record (whether in bulk or on an itemised Call basis) and process in accordance with paragraph 2.2, the Billing Information.

2.2 The following Billing Information shall be recorded for each Call type for which there is an entry in the Service Schedules:

2.2.1 Interconnect Node identifier;

2.2.2 the dialled digits and/or such other information as may be agreed;

2.2.3 Calling Line Identification (CLI) (if available); and

2.2.4 the date and the time when the Answer Signal is received by the Party providing the Billing Information.

2.2.5 Chargeable Call Duration (whether measured or derived).

2.2.6 The service type involved to the level of detail specified in the relevant Service Schedule

2.3 The Billing Party shall provide with the invoice appropriate support Billing Information, as outlined in clause 3, to enable the non-billing Party to validate the invoice.

3. Exchange of Billing Information

3.1 The Billing Party shall process the information specified in paragraph 2.2 so as to produce the matrix outlined below in Table 1, which shall be referred to as the Interconnect Usage Report.

Table 1

Call Type			
Service Type	Total Number of Calls N	Total Duration M	Total Revenue R
TOTAL	ΣN	ΣM	ΣR

or such other form of Interconnect Usage Report as the Parties may from time to time reasonably agree.

Where: N = the total number of Calls

Where M = the total Chargeable Call Duration

Where R = the total Revenue Charge which will comprise of:

M x Rate per minute; or
N x Rate per call; or
M x Rate per minute plus N x Rate per call

3.2 The Interconnect Usage Report shall be provided by the Billing Party to the other Party together with the resulting invoice, not earlier than 2 weeks and not later than 5 weeks after the end of each Billing Period.

3.3 The Billing Period for Interconnect Traffic shall be monthly commencing from 00.00 hours on the 1st day of each calendar month.

3.4 The Billing Party shall, for a period of 36 months after each Billing Period, store the Billing Information in such summary format and in such amounts as shall be sufficient to recalculate the amounts due from one Party to the other to take account of changes in the relevant prices.

3.5 If the Network or the Billing System of either Party malfunctions and fails to provide all of the Billing Information necessary for the Billing Party to prepare an invoice, the other Party shall at the request and reasonable expense of the Billing Party use its reasonable endeavours to supply the missing Billing Information to the Billing Party. There shall be no legal liability on the Billing Party for the preparation of an incorrect invoice resulting from inaccuracies in such Billing Information provided by the other Party to the Billing Party. The Parties acknowledge that Billing Information supplied by the other Party pursuant to this paragraph shall have been supplied via a verification system (rather than a Billing System) and such other Party cannot warrant that the information is free of error.

3.6 If the Parties' monitoring of their respective Billing Information indicates a persistent inconsistency in reconciling Billing Information provided by the Parties' respective Billing Systems, the Parties shall use their reasonable endeavours to ascertain the cause of such inconsistency, including, subject to the Parties agreement, the reference of the matter for investigation and resolution by such appropriate independent consultant as the Parties may agree, or in default of agreement, as may be nominated by Institute of Chartered Accountants. Such independent consultant shall act as an expert and not as arbitrator and whose decision, in the absence of manifest error, shall be final and binding. The Parties shall co-operate in such investigation. The independent consultant's costs for such investigation shall be paid by the Parties in such proportions as the independent consultant shall decide.

3.7 In the event of undetected errors in the Billing Information which result in either under or over invoicing and payment, either Party may request a review of the Billing Information for any Billing Period within 24 months of the date of the end of that Billing Period. When either party becomes aware of an error in the process, they must undertake all reasonable endeavours to make the necessary correction and where possible an estimate of the financial impact of these undetected errors should be provided.

3.8 In the event of the Billing Information not being available to either Party in time to produce the monthly invoice, the Parties agree that an invoice may be produced based on estimated Billing Information. This estimate shall be derived using the following formula for the required detail of each separate traffic stream in the Services Schedules;

Traffic Month N = Traffic Month (N-1)

This method of estimating invoices shall not be used for consecutive months.

3.9 The Billing Party must advise the Billed Party of the fact that any invoice is estimated together with the reasons for using estimates.

3.10 Final clearing of estimated Invoices must take place within 3 months of the date of issue of the estimated invoice.

4. Interconnect Path Billing

4.1 Transport Links, Interconnect Path and End User Links billing shall be carried out in accordance with the charging structure as outlined in the eircom RIO Network Price List and shall conform to the terms and conditions provided in Clause 6 hereof.

4.2 The commencement of charging for Transport Links, Interconnect Paths and End User Links will be in accordance with the relevant Service Schedules to this Interconnect Agreement. The Billing Period for Transport Links, Interconnect Paths and End User Links shall be quarterly with each quarter commencing on the 1st January, 1st April, 1st July and 1st October.

4.3 Transport Links, Interconnect Path and End User Links billing shall involve an initial invoice for Installation Costs and Rental Costs from the Commencement Date of Charging to the start of the next Billing Period. Thereafter invoicing will be quarterly in advance.

4.4 The Billing Information for Transport Links, Interconnect Paths and End User Links shall be based on the information provided for in Table 1 below.

Table 1

CIRCUIT NUMBER	A-END ADDRESS	B-END ADDRESS	CIRCUIT TYPE	CONNECTION FEE	RENTAL

5. Invoices

5.1 At the end of each Billing Period the Billing Party shall submit to the other Party, invoices for charges for Calls as outlined in clause 3, Transport Links, Interconnect Paths and End User Links as outlined in clause 4 and other services provided as part of this Interconnect Agreement for which the Billing Party is entitled to charge the other Party during such Billing Period.

5.2 All charges payable under this Interconnect Agreement shall be calculated in accordance with this Interconnect Agreement and at the rates specified from time to time in the appropriate Price List. Invoices raised under this Interconnect Agreement shall be paid in accordance with Clause 9 of the Main Body of this Interconnect Agreement.

5.3 For the avoidance of doubt, an invoice (including an invoice based on estimated information) shall be dated as of the date of despatch of that invoice.

5.4 For services (other than Call traffic, Transport Links, Interconnect Paths and End User Links) the Billing Party shall provide with the invoice appropriate Billing Information to enable the non-billing Party to accurately process the invoice for such services.

5.5 It may be necessary from time to time to issue an additional Invoice or credit note (in accordance with the terms of this agreement) in order to recover charges arising from the under or over-billing of services or as a result of agreement between the parties. The issuing party shall also provide a reasonable level of detail to support the additional invoice or credit note. Such invoices or credit notes may be subject to Clause 7 of this Annex B in the event of a dispute.

6. Payment

6.1 Subject as stated below, all charges due by one Party to the other under this Interconnect Agreement shall be payable by the Due Date.

6.2 If, pursuant to paragraph 7.1 of this Annex B, either Party shall have notified the other of a dispute relating to such invoice and such dispute shall not have been resolved before the Due Date, and if the amount in dispute represents:

6.2.1 less than 3 percent of the total amount (excluding VAT) of the relevant invoice and less than 6,250 EURO the total amount invoiced; or

6.2.2 3 per cent or more of the total amount (excluding VAT) of the relevant invoice or greater than 6,250 EURO the amount in dispute may be withheld until the dispute is resolved and the balance;

shall be due and payable on the Due Date. The amounts quoted in clauses 6.2.1 and 6.2.2 shall be cumulative over any 12 month period in relation to any particular area of dispute.

6.3 Notwithstanding notification of a dispute pursuant to clause 7.1 or 7.5 of this Annex B, if a Party fails to pay on the Due Date any amount due under this Interconnect Agreement or shall overpay any amount, the payee or, as the case may be (subject to clause 6.5) the over-payer, shall pay or be paid interest at the Default Interest Rate as at the Due Date or date of the overpayment in respect of any such amount outstanding.

6.4 Interest at the Default Interest Rate shall be payable (for late payment) from and including the day after the Due Date or (in the case of a refund) the later of the date of payment of the original amount to be refunded and the Due Date, in each case ending on the date of payment or, as the case may be, refund in full. Such interest at the Default Interest Rate shall accrue day by day and shall not be compounded.

6.5 If such overpayment results from information provided by the overpayer (which is not attributable to information provided by the payee Party), the

payee Party shall be under no obligation to pay any interest at the Default Interest Rate on the amount overpaid.

6.6 VAT shall be added to all or any part of the charges under this Interconnect Agreement and shall be paid by the Party responsible for making such payment.

7. Billing Disputes

7.1 A Billing Dispute can only be raised where a financial value can be identified as a dispute and where the Billed Operator maintains, through reasonable comparison methods that their equivalent financial values are different to those contained on the invoice ("Billing Dispute"). Financial values can differ, for example, where traffic volumes, traffic routing, products included and/or rates charged, do not correspond. Any Billing Dispute raised that is not in accordance with the procedures of this Clause set out below will not be accepted by the Billing Operator and will not be governed by this Annex. Each Party shall use its reasonable endeavours to resolve Billing Disputes with the other.

Investigation Procedure

7.2 If either Party ("the Disputing Party") disputes the accuracy or content of an invoice delivered pursuant to this Agreement the Disputing Party shall:

(a) notify the Billing Party in writing, no later than 1 Working Day prior to the Due Date of the disputed invoice if monies are being withheld, or within 24 months of the date of the end of that Billing Period, that it intends to raise a Billing Dispute. This notification shall be accompanied by all relevant details of the Billing Dispute. Where traffic volumes are being disputed, the disputing Party shall forward, in soft copy, traffic details specifically for the disputed period as follows:

(i) Total daily minutes for the product under dispute, distilled by the relevant Interconnect Node and the relevant Interconnect Route.

(ii) Total daily Calls for the product under dispute by the relevant Interconnect Node and the relevant Interconnect Route.

This notification shall be in the form set out in the Billing Dispute Notification Form as published on the eircom Wholesale website.

(b) Receipt of a Billing Dispute notice commences a Phase 1 Investigation.

7.3 The Billing Party shall:

(a) within 5 Working Days of receipt of the notice referred to in clause

7.2.(a) acknowledge the receipt of such notice in writing; and return their equivalent details to the Disputing Party, as outlined in 7.2(a)

(b) carry out an appropriate investigation of the disputed matters within 15 Working Days of the receipt of the information referred to in clause 7.2. (a) above (a "Phase 1 Investigation").

7.4 If the "Billing Dispute" is not resolved to both Parties satisfaction within 30 Working Days of the exchange of information referred to in clause 7.2 above, the parties shall, on day 31, exchange call detail records (CDRs) relevant to the area under dispute (Phase 2 Investigation). This should only include information for switches, routes and products that have been identified in earlier phases of investigation as the most likely source of discrepancy between the Parties.

Phase 2 Investigations shall be completed by the parties no later than 30 Working Days after the CDR exchange. All CDR information exchanged should contain the following details:

Calling Party Number	Called Party Number	Date For Start of Charge	Time For Start Of Charge	Chargeable Duration	I'connect Route	I'connect Node

7.5 If following a Phase 2 Investigation, the Billing Dispute is not resolved to the satisfaction of both Parties, then either Party may (by written notice to the other to such effect) refer the Billing Dispute to Phase 3 Investigation. Phase 3 is investigation and resolution by such chartered accountant as the Parties may agree, or in default of agreement, as may be nominated by the President of the Institute of Chartered Accountants, for the time being. Such chartered accountants shall act as an expert and not as arbitrator and whose decision, in the absence of evidence of manifest error, shall be final and binding. The Parties shall co-operate in such investigation and, if any sums are found to be due or overpaid by either Party in respect of the disputed invoice such sum shall be paid or refunded (with interest payable or paid pursuant to clause 6.3 above), as the case may be, within 20 Working Days from the date of resolution or earlier settlement between the Parties.

7.6 The costs of the chartered accountants agreed or nominated pursuant to clause 7.5 above shall be paid by the Disputing Party unless the relevant invoice is established to have been incorrect, or unless the expert determines it reasonable to apportion the costs on some other basis

Investigation Timeline

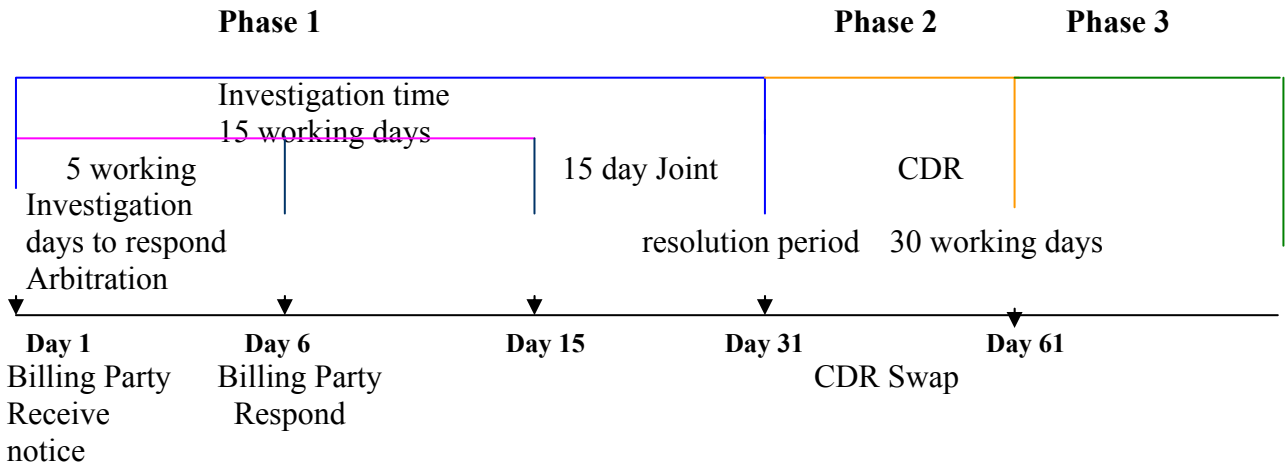

7.7 Except if otherwise specifically provided, all Billing Dispute correspondence shall be sent as follows:

Billing Dispute Contact

If to the Operator:

Contact:
Address: Telephone: 01 xxxxxxx
Address:
Address: Email:

If to eircom:

Billing Operations Manager,
Eircom Wholesale, Telephone: 01 6714444
St. Stephen's Green West,
Dublin 2. Email: CSBilling@eircom.ie

It shall be the responsibility of each Party to ensure that the information contained herein is accurate. In the event of any change in detail, it shall be that party's obligation to notify the other party in accordance with Clause 25 of

this Agreement.

7.8 Each Party shall use the above Billing Dispute resolution procedure for any Billing Dispute to the fullest extent to try to resolve such billing disputes. Either Party may seek to extend the above timescales for reasonable reasons, for example but not limited to, complexity of issues or data, such as back-billed data. The party receiving the request shall act reasonably in responding to such requests. This request shall be in the form set out in the Billing Dispute Extension Request Template as published on the eircom Wholesale website and shall be sent pursuant to Clause 7.7. The party receiving the request shall respond pursuant to Clause 7.7

7.9 If a Party fails to comply with any of the provisions and time-scales relating to Phase1/Phase 2 investigation (the "Defaulting Party") the other Party (the "Compliant Party"), shall issue a Notice of such failure to comply ("Failure to Comply Notice"), as set out in the Billing Dispute Failure to Comply notice as published on the eircom Wholesale website.
Failure to issue a Failure to Comply Notice shall not constitute a default or be used as the basis to issue a Failure to Comply Notice. A Failure to Comply Notice can be sent to a different contact from the Billing Dispute Contact if agreed by the Parties, such Agreement not reasonably withheld.

The Parties have agreed to include in this Agreement separate points of contact for the receipt of Failure to Comply Notices.

If to the Operator:

Contact:	
Address:	Telephone: 01 xxxxxxx
Address:	Email:
Address	

If to eircom:

Billing Operations Manager,	
Eircom Wholesale,	Telephone: 01 6714444
St. Stephen's Green West,	
Dublin 2.	Email: CSBilling@eircom.ie

7.10 Subsequent to the receipt of a Failure to Comply notice, should the Defaulting Party rectify the matter of non-compliance within the 2-week timeframe, the Billing Dispute shall recommence at the appropriate stage in the Billing Dispute Process timeline.

7.11 At the conclusion of the 2-week timeframe following the issue of a "Failure to Comply" notice, if the Defaulting Party has failed to comply with any of the provisions and time-scales relating to the investigation or as otherwise agreed in writing by the Parties, the Billing Dispute shall be deemed resolved in favour of the compliant Party and that the compliant Party shall be fully

entitled to payment of the full amount of the disputed invoice or credit together with interest payments at the Default Rate on such an amount, calculated from the Due Date.

7.12 The above procedures are without prejudice to any other rights and remedies that may be available under this Agreement or in law in respect of any breach of any provision of this Agreement.

7.13 Subject to the above, all disputed amounts shall be payable on resolution of the relevant Billing Dispute within 10 working days (together with applicable interest at the Default Interest Rate on any amount withheld by the Disputing Party in the event that the Billing Party is found not to be in fault). The amount owed and the interest owed on that amount will be billed on separate invoices.

7.14 Though it is the good faith intention of the Parties to use the above Billing Dispute resolution procedures to the fullest extent to try to resolve Billing Dispute, nothing in this Annex shall prevent either Party seeking, obtaining or implementing interlocutory or other immediate relief in respect of any Billing Dispute or referring, in accordance with Regulations 31 and 32 of the Framework Regulations, any matter relating to this Annex or any Billing Dispute arising in relation to this Annex, to the National Regulator requesting it to make a determination or take other appropriate steps for its resolution.

7.15 A formal acceptance of Billing Dispute closure is necessary for the specific Billing Dispute, not withstanding either Party's right to dispute other parts of the same invoice. This acceptance shall be in the form set out in the Billing Dispute Closure Form as published on the eircom Wholesale website.

ANNEX C

INDEX OF
Interconnect Services

SERVICE SCHEDULE NUMBER	SERVICE TITLE
***eircom* Network Services**	
001	Interconnect and Partial Private Circuit Transport Links
002	*eircom* Interconnect Paths
003	End User Links
004	Partial Private Circuits Migration
005	In Span Interconnection
***eircom* Services**	
102	*eircom* National Termination
103.	*eircom* Call Origination
104.	*eircom* National Transit
105.	Access to *eircom* Premium Rate Services
106.	Access to *eircom* Freefone Service
107.	Access to *eircom* LoCall Service
108.	Access to *eircom* Callsave Service
109.	Access to *eircom* Universal Number Service
110.	Access to *eircom* Personal Numbering Service
111.	*eircom* National Directory Enquiries
112.	*eircom* International Directory Enquiries
113	*eircom* National Operator Assistance
114.	*eircom* International Operator Assistance
115.	Access to Emergency Services (999 \ 112)
116	Access to eircom Packet Services
118.	*eircom* Customer Care Access
119.	International Access including Northern Ireland
120.	*eircom* Carrier Pre-Selection (CPS Service)
121.	Access to *eircom* 1891 Internet Service
122.	Access to *eircom* 1892 Internet Service
Operator Services	
205	Access to Operator Premium Rate Service
206	Access to Operator Freefone Service
207	Access to Operator Shared Cost Timed Service
208	Access to Operator Shared Cost Fixed Service
209	Access to Operator Universal Access Service
210	Access to Operator Personal Numbering Service
221	Access to Operator 1891 Internet Service
222	Access to Operator 1892 Internet Service

223	Access to Operator Primary Flat Internet Access Call Origination Service

Joint Services

301	Non Geographic Number Portability
302	Data Management Amendment
303	Geographic Number Portability

Single Billing through Carrier Pre Selection

401	Single Billing through Wholesale Line Rental

ANNEX C

SERVICE SCHEDULE 001

Interconnect and Partial Private Circuit Transport Links

This Service Schedule is effective from the date of signature of this Interconnect Agreement and/or any Amendment thereto and shall remain in effect until amended following agreement of the Parties or following determination by the National Regulator.

1. Definitions

1.1 In this Schedule, a reference to a paragraph or Appendix, unless stated otherwise, is to a paragraph or Appendix A of this Schedule. Words and expressions have the meaning given in Annex A.

Transport Link(s) means the link between the eircom Network and the Operator Network, as described in the PPC Product Description.

1.2 The document(s) referenced in this Service Schedule that is contractually binding:

Partial Private Circuit Product Description ("PPC Product Description")

The controlling document is the latest version of the above titled document published on eircom's website as agreed with the National Regulator following negotiations with industry if appropriate.

1.3 The following document(s) referenced in the Service Schedules that set the procedures and standards for operation, but are non-contractual:

a. Partial Private Circuit InterOperator Process Manuals (PPC IPM),

All references are to the latest version published on eircom's website as agreed with the National Regulator with industry input in respect of developments and /or changes.

1.4 The remainder of this Service Schedule is separated in three distinct sections:

Section A – STMx Customer Sited Handover Transport Links ("STMx CSH Links).
Section B – In Span Handover Transport Links ("ISH Links")
Section C – 2mb Transport Links.

Each section deals with a particular type of Transport link and provides the

terms and conditions associated with that particular type of Transport Link.

1.5 All orders for new or additional PPC components will be placed on the PPC order forms as published on the *eircom* wholesale website.

Section A

STMx Customer Sited Handover Transport Links hereinafter termed STM x CSH Links

2. Description of Service

2.1 Subject to the provisions of this Schedule, *eircom* shall provide STMx CSH Link service as specified from time to time in the PPC Product Description and the eircom "RIO Network Price List".

2.2 *eircom* shall provide and maintain the STMx transmission facility path between the Operator nominated Point of Handover and the *eircom* Node.

2.3 At locations Accessible to the *eircom* Network, the charges as outlined in the eircom "RIO Network Price List" shall apply. At other locations not Accessible to the *eircom* Network, individual price proposals will be prepared by *eircom* within 1 month, where possible, of a request for a Point of Interconnect at that location. This price proposal will be based on the projected costs involved in serving the specific location. If this target cannot be met, *eircom* will advise the Operator within the 1 month period of the detailed reasons why the price proposals cannot be provided within that time-frame but, in any case, *eircom* shall provide the price proposals within 2 months of the request for Interconnect.

2.4 The Point of Handover shall be in the Operator premises.

2.5 The Point of Handover shall be established by eircom installing its cable and terminating equipment at the Operator premises at a physical location agreed between the Parties.

2.6 Ordering, forecasting, provisioning and test procedures are specified in the PPC IPM. The procedures for cancellation, cessation and/or termination of STMx CSH Links are as set out in the PPC IPM. Operator requests for cancellation, cessation and/or termination of STMx CSH Transport Links may impact and disrupt eircom's ability to provide services for dependent End User Links and/or Interconnect Paths. *eircom* shall not be liable for any provision of service or quality of service impacts that may result, unless such requests form part of a project agreed in writing between the Parties.

2.7 The Operator may request that an individual 2MB path within the STMx CSH Link be designated as a Channelised E1 Link. This request shall be made and delivered in accordance with the PPC IPM.

2.8 Interconnect Paths using a STMx CSH Link shall be subject to Service Schedule 002 of the Interconnect Agreement.

2.9 End User Links using a STMx CSH Link shall be subject to Service Schedule

003 of the Interconnect Agreement.

3. STMx CSH Link Charging

3.1 The charges and/or charging principles for STMx CSH Links are as set out in the eircom RIO Network Price List.

3.2 *eircom* shall be entitled to invoice an Operator for the STMx CSH Link from the Commencement Date of Charging. Commencement Date of Charging for STMx CSH Links is the Actual Date of Delivery. Rental charges shall be payable quarterly in advance and any other charges shall be payable as set out in the eircom RIO Network Price List.

3.3 In the event the Operator cancels an order for a STMx CSH Link following order validation and prior to the Commencement of Charging Date, eircom shall be entitled to invoice the Operator for the connection charges as set out in the eircom RIO Network Price List.

3.4 The Operator shall be liable for the charges associated with the minimum period of service set out in Clause 5 in the event it issues a termination request that would take effect prior to the expiry of the minimum period for service.

3.5 Charging for Channelised E1 Link shall be effective from order completion in accordance with eircom RIO Network Price List.

4. Time Frames for Delivery

4.1 Provision of this service shall be in accordance with the PPC End user and 2Mb Transport Link and the STM-X Service Level Agreements published on eircom's website. The controlling documents are the latest version of the above titled documents published on eircom's website as agreed with the National Regulator following negotiations with industry if appropriate.

5. Term

5.1 The minimum period of service for any STMx CSH Link shall be 12 months commencing on the Commencement of Charging Date.

5.2 Each additional STMx CSH Link shall be subject to its own minimum period of service of 12 months commencing on the Commencement of Charging Date.

5.3 In the event that the termination of a STMx CSH Link is required, the Operator shall give to eircom in writing at least one months notice, expiring on the last day of the calendar month following that in which the notice is given. Where such a termination request takes effect prior to the expiry of the minimum period of service specified in 5.1 above, then the charges for the STMx CSH Link shall be as specified in 3.4 above. Where notice is given

which expires after the minimum period of service, charging shall cease on the last day of the notice period.

Section B
In Span Handover Transport Links
Hereinafter termed ISH Links

6. Description of Service

6.1 Subject to the provisions of this Schedule, *eircom* shall provide ISH Link service as specified from time to time in the PPC Product Description and the eircom RIO Network Price List. (Appendix 1 to this Service Schedule provides an overview of ISH Links for illustrative purposes only).

6.2 The Operator shall construct and maintain the transmission medium from their network to a point close to the *eircom* Node. *eircom* will connect with similar medium to this location in order to complete an end to end connection between the two Networks.

6.3 eircom shall provide the connection to each Point of Handover that is provided by the Operator located between the eircom nominated serving exchange and the Operator's premises as set out in the PPC Product Description.

6.4 The Point of Handover is as set out in the PPC Product Description. The Operator undertakes and agrees to comply with equipment, network and distance specifications and/or limitations set out in the PPC Product Description.

6.5 The Parties agree that network ownership and obligations shall be as set out in the PPC Product Description

6.6 Forecasting, ordering, provisioning, operation and maintenance procedures for ISH Links shall be as set out in the PPC Product Description, and the PPC IPM. The Parties undertake and agree to discharge their respective obligations as set out in the relevant documents. The procedures for cancellation, cessation and/or termination of ISH Links need to be developed to be set out in the PPC IPM. Operator requests for cancellation, cessation and/or termination of ISH Transport Links may impact and disrupt eircom's ability to provide services for dependent End User Links and/or Interconnect Paths. *eircom* shall not be liable for any provision of service or quality of service impacts that may result.

6.7 Interconnect Paths using the ISH Link shall be subject to Service Schedule 002 of the Interconnect Agreement.

6.9 End User Links using the ISH Link shall be subject to Service Schedule 003 of this Interconnect Agreement.

6.10 The Operator may request that an individual 2MB path within the ISH Link be designated as a Channelised E1 Link. This request shall be made and delivered in accordance with the InterOperator Process Manual.

7. Time Frame for Delivery

7.1 Provision of this service shall be in accordance with the PPC End user and 2Mb Transport Link and the STM-X Service Level Agreements published on eircom's website. The controlling documents are the latest version of the above titled documents published on eircom's website as agreed with the National Regulator following negotiations with industry if appropriate.

8. Charging

8.1 eircom shall be entitled to invoice Operator for and Operator shall be liable for payment for the ISH Link from the Commencement Date of Charging. The Commencement Date for Charging shall be no later than two weeks from the Ready for Test. Rental charges shall be payable quarterly in advance, and other charges shall be payable as set out in the eircom RIO Network Price List.

8.2 The charges and/or charging principles for ISH Links are as set out in the eircom RIO Network Price List.

8.3 In the event the Operator cancels an order for an ISH Link following order validation and prior to the Commencement of Charging Date, eircom shall be entitled to invoice the Operator for connection charges as set out in the eircom RIO Network Price List.

8.4 The Operator shall be liable for the charges associated with the minimum period of service set out in Clause 9 in the event it issues a termination request that would take effect prior to the expiry of the minimum period of service.

8.5 Charging for Channelised E1 Link shall be effective from order completion in accordance with eircom RIO Network Price List.

9. Term

9.1 The minimum period of service for any ISH Link shall be 12 months from the Commencement of Charging Date.

9.2 Each additional ISH Link shall be subject to its own minimum period of service of 12 months commencing on the Commencement of Charging Date.

9.3 In the event that the termination of a ISH Link is required, the Operator shall give to eircom in writing at least one months notice, expiring on the last day of the calendar month following that in which the notice is given. Where such a termination request takes effect prior to the expiry of the minimum period of service specified in 9.1 above, then the charges for

the ISH Link shall be as specified in 8.4 above. Where notice is given which expires after the minimum period of service, charging shall cease on the last day of the notice period.

Section C
2Mbit/s Transport Links

10. Description of Service

10.1 Subject to the provisions of this Schedule, eircom shall provide 2Mbit/s Transport service as specified from time to time in the PPC Product Description and the *eircom* RIO Network Price List

10.2 The 2Mbit/s Transport Link shall enable Operators to elect to aggregate sub-2Mbit/s End User Links onto a single 2Mbit/s Transport Link.

10.3 The Point of Handover shall be in the Operator premises.

10.4 Ordering, forecasting, provisioning and test procedures are specified in the PPC IPM.

10.5 The 2Mbit/s Transport Link shall only be used to support End User Links.

11 2mb Transport Link Charging

11.1 eircom shall be entitled to invoice Operator for the 2Mbit/s Transport Link from the Commencement Date of Charging. The Commencement Date for Charging shall be the time the 2Mbit/s Transport Link is designated as Ready for Service. Rental charges shall be payable quarterly in advance and any other charges shall be payable as set out in the eircom RIO Network Price List.

11.2 The charges and/or charging principles for 2Mbit/s Transport Links are as set out in the eircom RIO Network Price List.

11.3 In the event the Operator cancels an order for a 2Mbit/s Transport Link following order validation and prior to the Commencement of Charging Date, eircom shall be entitled to invoice the Operator for connection charges as set out in the eircom RIO Network Price List.

11.4 The Operator shall be liable for the charges associated with the minimum period of service set out in Clause 13 in the event it issues a termination request that would take effect prior to the expiry of the minimum period of service.

12 Time Frames for Delivery

12.1 Provision of this service shall be in accordance with the PPC End user and 2Mb Transport Link and the STM-X Service Level Agreements published

on eircom's website. The controlling documents are the latest version of the above titled documents published on eircom's website as agreed with the National Regulator following negotiations with industry if appropriate.

13. **Term**

13.1 The minimum period of service for any 2Mbit/s Transport Link shall be 12 months commencing on the Commencement of Charging Date.

13.2 Each additional 2Mbit/s Transport Link shall be subject to its own minimum period of service of 12 months commencing on the Commencement of Charging Date.

13.3 In the event that the termination of a 2Mbit/s Transport Link is required, the Operator shall give to eircom in writing at least one months notice, expiring on the last day of the calendar month following that in which the notice is given. Where such a termination request takes effect prior to the expiry of the minimum period of service specified in 13.1 above, then the charges for the 2Mbit/s Transport Link shall be as specified in 11.4 above. In the event that the Operator requests termination of a 2Mbit/s Transport Link following the minimum period of service, the Operator shall give to eircom in writing at least one month's notice, expiring on the last day of the calendar month following that in which the notice is given.

Appendix 1

In-Span Handover Transport Links
(Hereinafter ISH Links)

eircom will offer a Synchronous Digital Hierarchy (SDH) ISH Link at STM-1 and STM-4 where the other Party uses the same optical SDH interface as *eircom*. The ISH Link will enable the provision of 2 Mbit/s Interconnect Paths and/or End User Links up to the capacity of the Transport Link. The maximum capacity of the SDH Interconnection will be 63 x 2 Mbit/s at STM-1 and 252 x 2 Mbit/s at STM-4.

The Point of Handover (P.O.H.) of an ISH Link is the point at which the optical fibres in the other Party's cable are connected to the optical fibres in the *eircom* cable. The requesting Party shall provide an Optical Distribution Frame (ODF) at the P.O.H. *eircom* will terminate its optical fibres on one side of the ODF and the other Party will terminate its fibres on the other side of the ODF.

Alternatively, the connection between the Operator's fibre and *eircom's* fibre can be achieved through splicing.

The P.O.H. shall be located outside the boundary of the *eircom* interconnect node and shall be not more than 100 metres (duct length) from the boundary. *eircom* will identify suitable manholes within the immediate vicinity of its Interconnect Nodes which can facilitate the provision of In-Span connection. Where the Operator constructs their network to a point adjacent to such manholes, then no civil work charges will apply.

The maximum distance between the terminal ends of the SDH ISH Link shall be determined with reference to the available optical power budget.

.

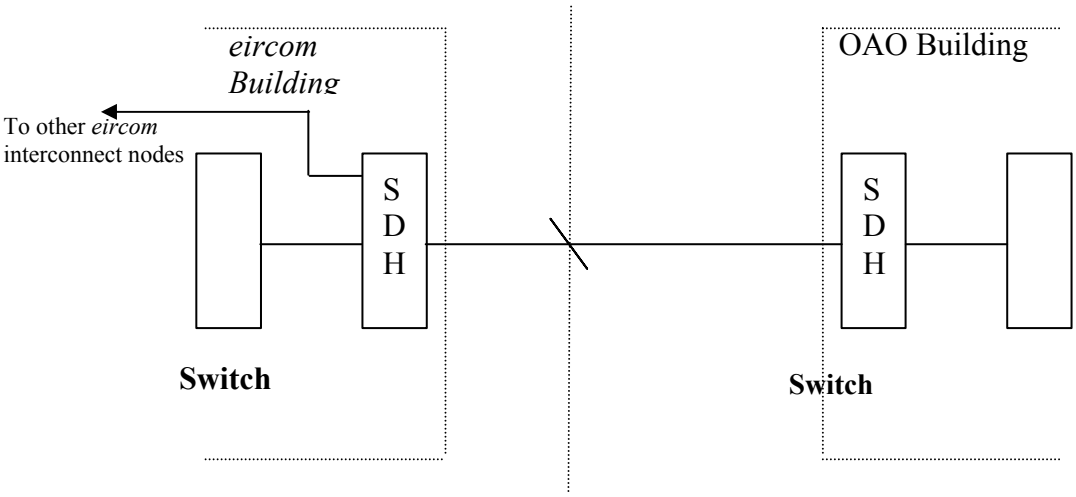

ANNEX C

SERVICE SCHEDULE 002

eircom Interconnect Paths

This Service Schedule is effective from the date of signature of this Interconnect Agreement and shall remain in effect until amended following agreement of the Parties to such amendment or following determination by the National Regulator.

1. Definitions

1.1 In this Annex, a reference to a clause or Appendix unless stated otherwise, is to a clause or Appendix of this Annex. Words and expressions have the meaning given in Annex A.

1.2 There are two (2) distinct types of Interconnect Paths as provided below, for the remainder of this Service Schedule they are collectively referred to as Interconnect Paths.

1.2.1 The majority of services in this Agreement are switched voice services and these are provided on voice Interconnect Paths.

1.2.2 FRIACO Interconnect Paths are 2Mbit/s paths dedicated for the purpose of providing Operator 1893 Flat Rate Internet Access Call Origination Service(s) as set out in Service Schedule 223 of this Annex C. FRIACO Interconnect Paths shall be subject to the terms and conditions of this Service Schedule unless otherwise directed by the National Regulator. In particular for the period to 27 June 2004 the processes for FRIACO Interconnect Paths as set out in the FRIACO Interconnect Service Inter-operator Process Manual will apply.

2. Methods of provision of Interconnect Paths

2.1 Interconnect Paths between the Operator's Network and the *eircom* Network can be provided in any of the following ways:

(a) Customer Sited Interconnect whereby *eircom* provides and maintains the Interconnect Path between the Operator nominated Point of Interconnect and the *eircom* Interconnect Node. At locations Accessible to the *eircom* Network, the charges set out in the eircom RIO Network Price List shall apply. At other locations not Accessible to the *eircom* Network, individual price proposals will be prepared by *eircom* within 1 month, where possible, of a request for a Point of Interconnect at that location. This price proposal will be based on the projected costs involved in serving the specific location. If this target cannot be met, *eircom* will

advise the Operator within the 1 month period of the detailed reasons why the price proposals cannot be provided within that time-frame but, in any case, *eircom* shall provide the price proposals within 2 months of the request for Interconnect; and/or

(b) via ISH Transport Links as defined in Service Schedule 001. In conjunction with ISH Transport Links, *eircom* shall provide extension interconnect circuits from the Interconnect Node at which the ISH Transport Link terminates in the *eircom* Network to other *eircom* Interconnect Nodes as requested by the Operator.

(c) via STMx CSH Transport Links as defined in Service Schedule 001. In conjunction with STMx CSH Transport Links, eircom shall provide extension interconnect circuits from the Interconnect Node at which the CSH Transport Link terminates in the eircom Network to other eircom Interconnect Nodes as requested by the Operator

(d) via ISI Bearer as defined in Service Schedule 005 In-Span Interconnect. In conjunction with ISI Bearers *eircom* shall provide extension interconnect circuits from the Interconnect Node at which the ISI Bearer terminates in the eircom Network to other eircom Interconnect Nodes as requested by the Operator

2.2 The provision of Interconnect Paths by *eircom* is subject to the terms and obligations set out in the *eircom* Service Level Agreement for Interconnect Paths. The controlling document is the latest version of this document published on *eircom's* website as agreed with the National Regulator following negotiations with industry if appropriate.

2.3 The Party's obligations in respect of forecasting Interconnect Paths shall be as set out in Appendix 2 to this Service Schedule.

3. Ordering of Interconnect Paths

3.1 New Interconnect Paths where there is an existing Interconnect Link and where it is proposed to utilise an existing Point of Interconnect must be ordered at least 6 weeks in advance of the requested Ready for Service date except in the instance where the transmission path has been pre provisioned, in which case the order must be placed at least 4 weeks in advance of the requested ready for service date. Delivery of Interconnect Paths ordered on this basis can only be guaranteed to the levels forecast and agreed between the Parties. For orders in excess of those forecast in the Network Plan, the Requested Party shall make all reasonable efforts to provide the Interconnect Paths requested but cannot guarantee that they will be provided within the timescale requested.

3.2 New Interconnect Links utilising an existing Point of Interconnect must be ordered at least 10 weeks in advance of the requested Ready for Service date. Interconnect Links ordered on this basis can only be provided if they have been included in the applicable Network Plan at the time when the order is being placed. Interconnect Links ordered that are not forecast in the Network Plan cannot be guaranteed to be provided in the timescale requested.

3.3 New Points of Interconnect utilising Customer Sited Interconnect must be ordered at least 14 weeks in advance of the requested Ready for Service date of the Interconnect Paths which are planned to be routed via this Point of Interconnect. This applies only in the case of locations which are Accessible to the *eircom* Network. Where the Point of Interconnect is at a location not Accessible to the *eircom* Network, timescales for provision will be provided on a case by case basis.

3.4 Interconnect Paths ordered utilising an existing STMx CSH Transport Link must be ordered 4 weeks in advance of the requested Ready for Service date of the Interconnect Paths. This applies to Interconnect Paths on an existing Interconnect Link to the Interconnect Node at which the Transport Link terminates.

3.5 Interconnect Paths ordered utilising an existing ISH Transport Link must be ordered 4 weeks in advance of the requested Ready for Service date of the Interconnect Paths. This applies to Interconnect Paths on an existing Interconnect Link to the Interconnect Node at which the Transport Link terminates.

3.6 Interconnect Paths ordered utilising an existing ISI Bearer must be ordered 4 weeks in advance of the requested Ready for Service date of the Interconnect Paths. This applies to Interconnect Paths on an existing Interconnect Link to the Interconnect Node at which the ISI Bearer terminates.

4. Interconnect Path Ordering Process

4.1 All orders for additional Interconnect Paths shall be placed using the standard order forms as published on the eircom Wholesale website. All orders shall be deemed to be accepted when the Requested Party issue a receipt to the Requesting Party accepting the order as placed. This receipt will issue within 5 working days of the order being received.

4.2 In the event of cancellation of the order for an Interconnect Path in advance of the Ready for Service date, liability for the relevant installation charges shall remain. Liability for 50% of installation charges is from the date of issue, by the Requested Party, of order receipt confirmation at clause 4.1. Liability for 100% of installation charges is from a date 2 weeks after the provision of order receipt confirmation at Clause 5.1.

5. Commissioning of Interconnect Paths

5.1 Interconnect Paths shall be commissioned in line with the procedures outlined in the Interconnect Operations and Maintenance Manual and the Service Level Agreement for Interconnect Paths which are both published on the *eircom* wholesale website as agreed with the National Regulator following negotiations with the Industry, if appropriate.

5.2 The first stage of commissioning shall conclude with the delivery of the transmission portion of the Interconnect Path. *eircom* shall issue a notification of transmission delivery (Ready for Test).

5.3 Following the delivery of the transmission, end to end circuit commissioning of the Interconnect Path shall take place.

5.4 In the case of Interconnect Paths on existing Interconnect Links, two weeks will be allowed to complete these tests. The tasks required for the achievement of the Actual Date of Delivery for Interconnect Paths are set out in the Interconnect Operations and Maintenance manual.

5.5 The completion date of these commissioning tests or the expiry of the 10 Working Day period, whichever comes first shall determine the Commencement Date of Charging. Delays in the commissioning process caused by the Requested Party or the Requested Parties Network will cause this date to be deferred. The Actual Date of Delivery shall be mutually agreed by the Parties in these circumstances and shall also determine the Commencement Date of Charging.

5.6 In the case of Interconnect Paths to a new Interconnect Node, two weeks will be allowed to complete the commissioning tests. The tasks required for the achievement of the Actual Date of Delivery for Interconnect Paths are set out in the Interconnect Operations and Maintenance manual.

5.7 The completion date of these tests or the expiry of the two-week period, whichever comes first shall determine the Commencement Date of Charging. Delays in commissioning process caused by the Requested Party or the Requested Party's Network will cause this date to be deferred.

5.8 The Requested Party shall issue notice to the Requesting Party of the Commencement Date of Charging. The Requesting Party shall have 1 week in which to query this notification.

5.9 In the case of a dispute in relation to Commencement Date of Charging, the dispute resolution process outlined in Clause 17 of the Main Body of this Interconnect Agreement shall come into effect.

5.10 The minimum contract term for Interconnect Paths provided shall be 12 months from the Commencement Date of Charging. The Operator shall be liable for the charges associated with the minimum contract term in the event

that the Operator issues a termination request that would take effect prior to the expiry of the minimum contract term (a "cessation")

6. *eircom* Interconnect Path Charging for Customer Sited Interconnection

6.1 *eircom* Interconnect Path charging will consist of two elements;

(a) Installation charges
(b) Annual Rental Charges

6.2 The elements of installation charges for Interconnect Paths shall comprise;

6.2.1 Transmission installation charges at the Point of Interconnect.

6.2.2 Intra-building installation charges at the *eircom* Interconnect Node.

6.3 The rental element of charging for Interconnect Paths shall comprise;

6.3.1 Transmission charges from the Point of Interconnect to the *eircom* Interconnect Node. These transmission rental charges shall comprise Local End, Main Link access and Main Link Distance elements.

6.3.2 Intra-building charges at the *eircom* Interconnect Node.

7. *eircom* Interconnect Path Charges for Customer Sited Interconnection

7.1 For each of the initial two Interconnect Paths from any Operator Interconnect Node to any *eircom* Interconnect Node the charges shall be as set out in the eircom RIO Network Price List. The rationale for separate charging for the initial two Interconnect Paths is set out in Appendix 1 which should be read in conjunction with the Technical Manual.

7.2 For each additional Interconnect Path on an existing Interconnect Link, the charges shall be as set out in the eircom RIO Network Price List.

7.3 If more than one Interconnect Path is ordered at the same time and with the same Point of Interconnect, then a discount of 50% on the transmission Installation Charge shall apply to all Interconnect Paths after the first. These prices are quoted as being effective based on the assumption that the Point of Interconnect is Accessible to the *eircom* Network.

7.4 The charges for Local End rental per annum where the level of utilisation of the transmission system in the access network reaches the defined thresholds shall be as set out in the eircom RIO Network Price List.

7.5 In the case where the Point of Interconnect is not Accessible to the *eircom* Network, initial Interconnect Path installation charges shall be set on a case by case basis.

7.6 Where local end transmission diversity between the Point Of Interconnect and the *eircom* Local Exchanges is provided, the Operator shall pay the appropriate cost of providing this diverse facility. However the Operator will be able to recover this amount by means of a 50% discount on net transmission installation charges for Interconnect Paths routed on this diverse facility. The discount will be available for circuits ordered during the first two years after the system goes into service or until the full cost has been recovered. All Interconnect Paths for each Interconnect Link utilising this Point of Interconnect shall be distributed across these separate physical paths.

7.7 The basis for the length of the main link shall be the radial distance from the *eircom* Local Exchange for the Point of Interconnect to the *eircom* Interconnect Node.

8. *eircom* Interconnect Path Charging for Paths provided on STMx, CSH and ISH Transport Links

8.1 The charges for each Interconnect Path provided on the STMx CSH and ISH Transport Link to the *eircom* Interconnect Node at which the STMx CSH and ISH Transport Link terminate are as set out in the *eircom* RIO Network Price List.

8.2 The charges for each Interconnect Path provided on the STMx CSH and ISH Transport Link to the *eircom* Interconnect Node, other than that at which the STMx CSH and ISH Transport Link terminate are as set out in the *eircom* RIO Network Price List. Such Interconnect Paths shall be referred to as Extension Interconnect Paths.

8.3 If more than one Interconnect Path is ordered at the same time and with the same Point of Interconnect, then a discount of 50% on the Installation Charge shall apply to all Interconnect Paths after the first

9 Re-arrangements of Interconnect Paths

9.1 Requests for physical re-arrangements of Interconnect Paths where either the *eircom* Interconnect Node or Point of Interconnect is changing shall be dealt with on the same basis as initial provisioning arrangements. Normal Interconnect Path connection charges shall apply. Major network re-arrangements may be subject to non-standard mutually agreed lead-times and shall be implemented on a project basis.

9.2 The order period for re-arrangement of an Interconnect Path to an existing Interconnect Node or Point of Interconnect shall be 8 weeks. The order period for re-arrangement to a new Interconnect Node shall be 12 weeks. Major network re-arrangements may be subject to non-standard mutually agreed lead-times and shall be implemented on a project basis.

9.3 The rental charges for re-arranged Interconnect Paths shall be the same as outlined above. There will be no refund of rental charges for the old Interconnect Path arrangement. The 12-month minimum contract period will not be enforced in relation to re-arrangement of Interconnect Paths where the re-arrangement is planned in the Network Plan. This is also the case where existing Interconnect Paths are being re-arranged onto either an ISH Transport Link or STMx CSH Transport Link assuming that the Interconnect Paths were ordered prior to the placement of the order for the ISH Transport Link or STMx CSH Transport Link.

9.4 Requests for re-arrangements of Interconnect Paths where the Operator Interconnect Node is changing shall be dealt with on the same basis as Data Management Amendments and the similar charging arrangements shall apply. Major network re-arrangements may be subject to non-standard mutually agreed lead-times and shall be implemented on a project basis.

10 Termination of Interconnect Paths

10.1 In the event that the termination of an Interconnect Path is required, the Operator shall give to eircom in writing at least one month's notice, expiring on the last day of the calendar month following that in which the notice is given. Where such a termination request takes effect prior to the expiry of the minimum period of service specified in 5.10 above, then the charges for the Interconnect Path shall be as specified in 5.10 above. Where notice is given which expires after the minimum period of service, charging shall cease on the last day of the notice period.

Appendix 1

The Minimum Configuration for Interconnection with any *eircom's* Interconnect Node

An Interconnect Link must consist of one Interconnect Path, minimum, and must have a signalling link installed on it.

In order to make sure that the integrity of the Interconnect Link between the Operator and *eircom* is not compromised, when the Operator wishes to connect an additional Interconnect Path to any *eircom* Interconnect Node, the Operator must install a signalling link on that Interconnect Path also. (i.e. all Interconnect Links between any *eircom* Interconnect Node and any Operator Interconnect Node comprising of two or more Interconnect Paths, must have two signalling links.) It is noted that the second Interconnect Path is not mandatory.

Example

A signalling link must also be placed on the second Interconnect Path ordered by the Operator on the original *eircom* Interconnect Node

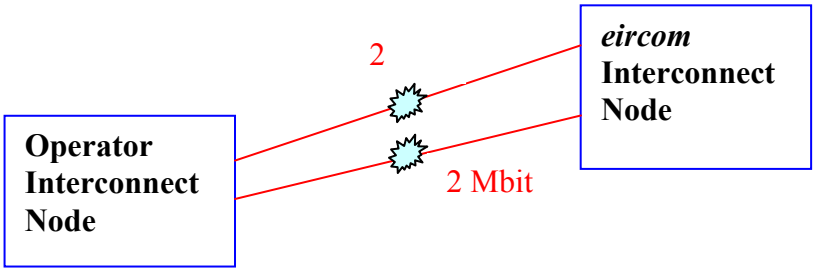

= signalling link

Appendix 2

Forecasting and Committed Uptake

1. Interconnect Path forecasts must be provided by the Operator each quarter for the next three (3) quarters following the processes set out in the Interconnect O&M Manual published on the eircom website. These forecasts cover the Operator owned routes and where the Interconnect is yet to be deemed mature also cover the eircom owned routes.

2. These forecasts represent a commitment by the Party to order Interconnect Paths to the Committed Uptake level ("Committed Uptake and/or CU"). The Committed Uptake level is calculated separately for forecasted capacity at each of the Network hierarchical levels i.e. Primary, Tandem and Tertiary. In the event that the Party does not order Interconnect Paths to the Committed Uptake level, eircom shall raise charges for the appropriate number of circuits to bring the Operator to the Committed Uptake level. The charge raised shall be three (3) months rental as calculated below.

3. The following constitutes the method of calculation of an Operators Committed Uptake:

Submission #1	Qtr1 CU = 75% (e.g. Oct - Dec)	Qtr2 CU = 50% (e.g. Jan - Mar)	Qtr3 CU = 35% (e.g. Apr - June)			
Submission #2		Qtr1 CU = 75% (e.g. Jan - Mar)	Qtr2 CU = 50% (e.g. Apr - June)	Qtr3 CU = 35% (e.g. July - Sept)		
Submission #3			Qtr1 CU = 75% **(e.g. Apr -**	Qtr2 CU = 50% (e.g. July - Sept)	Qtr3 CU = 35% (e.g. Oct - Dec)	
Submission #4				Qtr1 CU = 75% (e.g. July - Sept)	Qtr2 CU = 50% (e.g. Oct - Dec)	Qtr3 CU = 35% (e.g. Jan - Mar)

a) The incremental growth seen in quarter 1 of submission #1 will support an CU of 75%.
b) The Operator will incur those costs related to the Interconnect Paths required to reach 75% of the incremental growth in quarter 1 of submission '1 by the end of quarter 1 of submission #1.
c) With the advent of submission #2 the Operator will incur costs related to the Interconnect Paths required to reach the higher of either:-
    (i) 75% of the incremental growth seen in quarter 1 of submission #2, or
    (ii) 50% of the incremental growth seen in quarter 2 of submission #1
d) With the advent of submission #3 the Operator will incur costs related to the Interconnect Paths required to reach the higher:-
    (i) 75% of the incremental growth seen in quarter 1 of submission #3, or
    (ii) 50% of the incremental growth seen in quarter 2 of submission #2
    (iii) 35% of the incremental growth seen in quarter 3 of submission #1 if the total forecasted capacity level is greater than 10 interconnect paths. If the total incremental growth for the quarter is less than or equal to 10 Interconnect Paths, no committed uptake shall apply to that quarter in that submission
e) Where the total incremental growth forecast in any submission for any individual quarter is greater than 40 Interconnect Paths, a 100% Committed Uptake shall apply to all Interconnect Paths in excess of 40.
f) This process of determining the greater of the costs associated with the Committed Uptake for each quarter shall continue unless agreed by both Parties.
g) In the event that the calculation of Committed Uptake for the Operator in any given quarter is not an integer, eircom will round up to the nearest integer and calculate cost accordingly.
h) The calculation of Operators Committed Uptake will be based on CSI or Non-CSI Paths via the detail supplied in Operators three quarter rolling forecast.
i) The methodology utilised to calculate the charges applied to the balance on Interconnect paths to reach the CU will be to derive the average interconnect Path charge for that Operator from the previous quarterly invoice and apply that average to the number of Interconnect Paths to reach the CU.

ANNEX C

SERVICE SCHEDULE 003

End User Links

This Service Schedule is effective from the date of signature of this Interconnect Agreement and/or an Amendment and shall remain in effect until amended following agreement of the Parties to such amendment or following determination by the National Regulator.

1. Definitions

1.1 In this Schedule, a reference to a paragraph, unless stated otherwise, is to a paragraph of this Schedule. Words and expressions have the meanings give in Annex A, except as shown below:

"End User" means either the Operator or a customer of the Operator on whose behalf an End User Link is ordered.

"End User Link(s)" means the circuit from the designated Transport Link to the End User NTU as more fully set out in the PPC Product Description.

1.2 The document(s) referenced in this Agreement that is contractually binding:

Partial Private Circuit Product Description ("PPC Product Description")

The controlling document is latest version of the above titled document published on *eircom*'s website as agreed with the National Regulator following negotiations with industry if appropriate.

1.3 The following document(s) referenced in this Agreement sets the procedures and standards for operation, but are non-contractual:

a. Partial Private Circuit InterOperator Process Manuals ("PPC IPM")

All references are to the latest version published on *eircom*'s website as agreed with the National Regulator with industry input in respect of developments and/or changes.

2. Description of Service

2.1 Service shall consist of an End User Link as specified by the Operator in its order; available bandwidths are as specified from time to time in the PPC Product Description and the charging principles set out in the *eircom* RIO Network Price List

2.2 The provisioning and maintenance of End User Links will be governed by the PPC IPM.

2.3 The requirements for ordering an End User Link shall be as set out in the PPC Product Description and/or PPC IPM. Subject to the requirements of the PPC Product Description, the ordering procedures for the End User Link shall follow PPC IPM.

2.4 End User Links must be ordered with a matching capacity allocation on an associated Transport Link. The terms and conditions for Transport Links are set out in Service Schedule 001.

2.5 In the event that the order for the End User Link does not satisfy the requirements set out in the PPC Product Description and/or PPC IPM or the requirements of Service Schedule 001, the order for the End User Link will be rejected.

2.6 Use of the End User Link may be restricted by *eircom* in accordance with applicable law or regulation.

2.7 The Operator agrees that from time to time it may be necessary for *eircom* to temporarily suspend service on the End User Link(s) during periods of repair, essential maintenance or alteration or improvement to *eircom*'s electronic communications network. Where possible *eircom* will give the Operator notice prior to such suspension and *eircom* will restore service as soon as possible after such suspension.

3. End User Link Charging

3.1 The charges and/or charging principles for End User Links are as set out in the *eircom* RIO Network Price List.

3.2 *eircom* shall be entitled to invoice the Operator and the Operator shall be obligated to pay for an End User Link from the Commencement Date of Charging. The Commencement Date of Charging shall be the Actual Delivery Date. Rental charges shall be payable quarterly in advance. Other charges shall be applied as set out in the *eircom* RIO Network Price List.

3.3 In the event the Operator cancels an order for an End User Link following order validation and prior to the Commencement Date for Charging, *eircom* shall be entitled to invoice the Operator for the connection charges as set out in the *eircom* RIO Network Price List.

3.4 The Operator shall be liable for charges associated with the minimum period of service set out in Clause 4 in the event that the Operator issues a termination request that would take effect prior to the expiry of the minimum period of service.

4 Term

4.1 The minimum period of service for any End User Link shall be 12 months commencing on the Commencement Date of Charging

4.2 In the event that the termination of an End User Link is required, the Operator shall give to eircom in writing at least one month's notice, expiring on the last day of the calendar month following that in which the notice is given. Where such a termination request takes effect prior to the expiry of the minimum period of service specified in 4.1 above, then the charges for the End User Link shall be as specified in 3.4 above. Where notice is given which expires after the minimum period of service, charging shall cease on the last day of the notice period.

ANNEX C

SERVICE SCHEDULE 004

PPC Migration

This Service Schedule is effective from the date of this Interconnect Agreement and/or an Amendment and shall remain in effect until amended following agreement of the Parties to such amendment or following determination by the National Regulator.

1. Definitions

In this Service Schedule, a reference to a clause or Appendix unless stated otherwise, is to a clause or Appendix of this Schedule. Words and expressions have the meaning given in Annex A or elsewhere in the Interconnect Agreement, except as shown below.

"Bulk Migration": means a migration of more than one circuit as more fully set out in Clause 4 of this Service Schedule.

"Eligible for Initial Bulk Migration": To be Eligible for the Initial Bulk Migration, an Interconnect Path and/or Leased Line shall:

a) be in situ or on order prior to 15th November 2003, and

b). in the name of Operator and under contract with *eircom* or subject to eircom's standard published terms and conditions and being provided to Operator; and

c). have an equivalent product available as a Partial Private Circuit under the PPC Product Description or the Interconnect Agreement to which it may be migrated; and

d) be terminated at one end at the Operator premises in which the proposed Transport Link is terminated.

Eligible for Migration": To be Eligible for Migration, an Interconnect Path and/or Leased Line shall:

a) be in situ or on order prior to the 15th November 2003, and

b). be in the name of Operator and under contract with *eircom* or subject to eircom's standard published terms and conditions and being provided to Operator; and

c). has an equivalent product available as a Partial Private Circuit under the PPC Product Description or the Interconnect Agreement to which it may be migrated, and

d) be terminated at one end at the Operator premises in which the proposed Transport Link is terminated.

"Failed Migration": means a Migration that fails, either technically or with respect to dates of Implementation, due to the failure of one of the Parties to fulfil its obligations under Clause 3 of this Service Schedule, or as set out in individual MIAs.

"Individual Migration": means a single order placed in respect of an individual circuit or individual channelised system for Migration as more fully set out in Clause 3 of this Service Schedule. For an individual channelised system the order must detail all circuits within that system.

"Information": means the information requested by Operator with respect to each Operator Node and supplied by eircom with respect to each Operator Node or transmission system in the template set out in the Migration Process Manual.

"Initial Bulk Migration": means the initial large scale migration of Interconnect Paths and leased lines that are Eligible for Initial Bulk Migration as more fully set out in Clause 4 of this Service Schedule.

"Initial Bulk Migration Project Plan": means the high level Project Plan agreed between the Parties from which sub-projects shall be developed and implemented.

"Migration": means the facility to migrate to Partial Private Circuits those Interconnect Paths and/or Leased Lines that are eligible for Migration.

"Migration Implementation Agreement or MIA": means the binding agreement entered into by the Parties, which sets out the terms and conditions of the implementation of individual Sub-Projects.

"Product Launch" means the date the approved terms and conditions to support the introduction of Partial Private Circuits are published in eircom's Reference Interconnect Offer.

"Project Plan": means the plan agreed between the Parties to allow the bulk migration to be implemented.

"Sub- Projects": means agreed, detailed implementation plans in respect of an Operator Node or transmission system or individual circuits which form the individual strands of the Initial Bulk Migration.

1. General

1.1 If the resource impact of multiple high level Initial Bulk Migration Project Plans received from industry prevents or is likely to prevent eircom from reaching agreement on project timescales with one or more operators then eircom shall notify the National Regulator and meet with the National Regulator to agree what action shall be taken. Eircom shall ensure that the Operators are also notified of the situation. The National Regulator shall following discussion with industry determine how this situation shall be managed.

1.2 All Initial Bulk Migration and Bulk Migration orders will be delivered in accordance with the agreed Project Plans or Sub-Projects and will be handled outside the scope of any Service Level Agreements in place relating to the provision of PPCs but be subject to the provisions of the associated MIA.

2. Conditions of Individual Migration

2.1 In the case of an Individual Migration, the Operator may place an order in accordance with the procedures set out in the Partial Private Circuit Industry Migration Process. ("Migration Process Manual"). It is the Operator's discretion as to whether the Operator wishes to request Information prior to placing an order. The charges for Information are set out in the eircom RIO Network Price List and the Operator is liable for payment regardless of whether an order is placed for Migration.

2.2 Provided an order is Eligible for Migration, *eircom* shall process the order in accordance with the Migration Process Manual. Once the order is Validated, *eircom* shall advise Operator of the target date for delivery ("Target Date"). In the event that the order is not Eligible for Migration or fails validation, *eircom* shall reject the order.

2.3 *eircom* shall be entitled to invoice and the Operator shall be obligated to pay eircom for the charges relating to the Individual Migration as set out in the eircom RIO Network Price List.

2.4 The new rental charges applicable to Partial Private Circuits shall apply from the Migration Effective Date and the charges associated with the migrated leased line or Interconnect Path will cease from that same date. The Migration Effective Date shall be the actual date of Migration unless directed otherwise by the National Regulator.

2.5 *eircom* shall use reasonable endeavours to promptly reflect charges on invoices issued and to reflect credits and/or debits following a Migration Effective Date.

3. Conditions of Initial Bulk Migration

3.1 The Operator shall develop and submit within 6 months of Product Launch an overall high level Initial Bulk Migration Project Plan for *eircom* to review for the purposes of reaching agreement. The Operator shall be entitled to one Initial Bulk Migration. For the avoidance of doubt, no Project Plan for a Bulk Migration will be accepted if submitted prior to an Operator submitting an Initial Bulk Migration Project Plan during the period for Initial Bulk Migrations. This Initial Bulk Migration Project Plan will cover all nodes that are intended to be included in the Initial Bulk Migration. It shall also provide a prioritisation of the proposed Migration, identify sub-projects and provide indicative timescales as more fully set out in Appendix 2. Eircom shall engage with the Operator in an effort to agree this overall Initial Bulk Migration Project Plan and such agreement shall not be unreasonably withheld. This engagement shall be informed by the levels of resource available to *eircom* and the number and scale of Initial Bulk Migrations received from industry. Where the Operator is unable to agree their Initial Bulk Migration Project Plan with eircom, they may refer such Plan to the National Regulator for determination of reasonableness. The National Regulator will consider the

reasonableness of such plan on the basis of evidence supplied by the Operator and by eircom.

3.2 Each Sub-Project resulting from the Initial Bulk Migration Project Plan shall be subject to the terms and conditions set out in a Migration Implementation Agreement ("MIA"). A MIA shall be agreed in two stages,

a). agreement of Section 1 of the MIA which shall constitute agreement of the initial Sub-Project, including without limitation, the scope of the information to be exchanged, the timeframes for such exchange, and the obligations and timeframes in respect of defining and planning the detailed implementation of the Migration, and

b) agreement of Section 2 of the MIA which shall constitute the details of implementation including the transmission system(s) and circuits to be migrated and the obligations of the Parties and dates for Migration.

If at anytime during this process of agreement, either Party considers the other to acting unreasonably or proposing unreasonable terms, the Party may refer the matter to the National Regulator for determination of reasonableness.

3.3 The Operator shall be liable for the charges relating to the provision of Information by eircom regardless of whether or not a Sub-Project Plan is agreed or a Migration ordered and/or effected

3.4 *eircom* shall be entitled to recover its costs regardless of whether or not a Sub-Project Plan is agreed or an Initial Bulk Migration implemented in respect of any Site or transmission system is ordered and/or affected. The Parties undertake and agree to act reasonably in defining and agreeing each MIA. Sub-Projects will only be developed in respect of Interconnect Paths and Leased Lines that are Eligible for Initial Bulk Migration.

3.5 The target dates for the implementation of a Project shall be as set out in the MIA ("Migration Effective Date"). The Migration Effective Date shall be the target date(s) in the Sub-Project Plan unless the Failed Migration is attributable to the Operator. In cases where the Failed Migration is attributable to the Operator the Migration shall be based on the redefined Sub-Project plan as revised by eircom, and the actual date of Migration shall be the actual Migration Effective Date. If the Operator is of the opinion that the revised date proposed by eircom is unreasonable, then this matter may be referred to National Regulator for determination of reasonableness. The National Regulator will consider the reasonableness of such revised dates on the basis of evidence supplied the Operator and by eircom and taking into account the cause of the original delay. In the event the National Regulator directs otherwise, the Migration Effective Date shall be as directed.

3.6 In respect of each MIA, *eircom* shall be entitled to invoice and Operator shall be liable to pay for the charges set out in either the MIA or the eircom Network Price List from the Migration Effective Date(s).

3.7 In respect of each MIA, the new rental charges applicable to Partial Private

Circuits shall apply from the Migration Effective Date.

3.8 *eircom* shall use reasonable endeavours to reflect charges on invoices issued and to reflect credits and/or debits following the Migration Effective Date in respect of each MIA.

4 Conditions of Bulk Migration

4.1 The Parties shall if requested by the Operator exchange and provide such information as is required to develop and agree a Project Plan. For a Bulk Migration, the Operator shall be liable for the charges relating to the provision of Information by eircom regardless of whether or not a Project Plan is agreed or a Migration ordered and/or effected.

4.2. The Operator shall develop and submit a Project Plan for Bulk Migration to *eircom* for its review and comment. *Eircom* shall be entitled to recover its costs regardless of whether or not a Project Plan is agreed or a Bulk Migration ordered and/or effected. The Parties undertake and agree to act reasonably in defining and agreeing the Project Plan. A Project Plan will only be developed in respect of Interconnect Paths and Leased Lines that are Eligible for Migration. Where the Operator is unable to agree their Project Plan with eircom, they may refer such Project Plan to the National Regulator for determination of reasonableness. The National Regulator will consider the reasonableness of such plan on the basis of evidence supplied by the Operator and by eircom.

4.3 Following agreement of the Project Plan, the Parties shall enter into a Migration Implementation Agreement ("MIA") in respect of the terms and timelines for each Project. The target dates for the implementation of a Project shall be as set out in the MIA. "The Migration Effective Date" shall be the actual date of Migration. If eircom attempts to meet an agreed date for an element of such plan but cannot do so due to the inability of the Operator to achieve the Migration on the agreed date, then that part of the plan will be deemed to be a Failed Migration. In the case of a Failed Migration a new plan for this portion o f the Migration shall be drawn up by eircom and the Migration Effective Date shall be as set out in eircom's plan. If the Operator is of the opinion that the revised date proposed by eircom is unreasonable then this matter may be referred to National Regulator for determination of reasonableness. The National Regulator shall consider the reasonableness of such revised dates on the basis of evidence supplied by the Operator and by eircom and taking into account the cause of the original delay.

4.4 In respect of each MIA, *eircom* shall be entitled to invoice and Operator shall be liable to pay for the charges set out in either the MIA or the eircom Network Price List from the Migration Effective Date.

4.5 In respect of each MIA, *eircom* shall adjust the rental charges set out in respect of the Migrated Partial Private Circuits within the scope of that MIA from the Migration Effective Date.

4.6 *eircom* shall use reasonable endeavours to promptly reflect charges on invoices issued and to reflect credits and/or debits following the Migration Effective Date in respect of each MIA.

Appendix 1

Sample
Migration Implementation Agreement

This Migration Implementation Agreement ("MIA") is made on [Date]

between

[Operator Name] having its registered office at [Operator Address], (herein referred to as "the Operator" or "Operator")

and

eircom Ltd. having its registered office at 114, St. Stephen's Green West, Dublin 2, (herein referred to as "*eircom*")

Section 1. Initial Sub-Project Plan

A. Scope

The scope of the Initial Sub-Project Plan shall be:

B. Obligations of the Parties

The obligations of the Parties for the purpose of this Section A of the MIA shall be:

The obligations shall primarily relate to and should designate timeframes:

Requests for Information
Exchange of Information
Development of final Sub-Project Plan
Review and Agreement of final Sub-Project Plan
Other matters as may be agreed

C. Consequences of Failure to Fulfil Obligations (Failed Migration)

1. In the event that *eircom* fails to fulfil its obligations as set out in Section 2 hereof, the following shall apply:

2. In the event that Operator fails to fulfil its obligations as set out in Section 2 hereof, the following shall apply:

D. Charges

1. The charges for this MIA shall be as set out in the *eircom* RIO Network Price List.

Note: In the event of any exceptional items arising for a particular MIA, such charges may be covered in this section.

Signed for and on behalf of Operator:	Signed for and on behalf of eircom Ltd:
_____	_____
Name	Name
_____	_____
Title	Title
_____	_____
Date	Date

Section 2. Final Sub-Project Plan and Migration Implementation

A. Scope

The scope of the Final Sub-Project Plan and Migration Implementation shall be:

Detail to circuit level.

B. Obligations of the Parties

The obligations of the Parties for the purpose of this Section B of the MIA shall be:

The obligations shall primarily relate to final preparations and implementation and should designate timeframes.

C. Consequences of Failure to Fulfil Obligations (Failed Migration)

1. In the event that *eircom* fails to fulfil its obligations as set out in Section 2 hereof, the following shall apply:

2. In the event that Operator fails to fulfil its obligations as set out in Section 2 hereof, the following shall apply:

D, Charges

1. The charges for this MIA shall be as set out in the *eircom* RIO Network Price List.

Note: In the event of any exceptional items arising for a particular MIA, such charges may be covered in this section.

Section 3

Governing Law

1.1 The interpretation, validity and performance of this Migration Implementation Agreement shall be governed in all respects by the laws of Ireland and the Parties submit to the exclusive jurisdiction of the Irish Courts.

Signed for and on behalf of Operator:	Signed for and on behalf of eircom Ltd:
_____	_____
Name	Name
_____	_____
Title	Title
_____	_____
Date	Date

Appendix 2

Requirements for Initial Bulk Migration Project Plan

In order to constitute an Initial Bulk Migration Project Plan for purposes of this Service Schedule, the Project Plan must include at a minimum:

- The list of sites
- Indicative timescales
- Indicative number of circuits by type at each site

The Initial Bulk Migration Project Plan should also include:

- A statement that the information gathering requirements will be dealt with at the initial stage of each Sub Project
- A statement that the Migration of each individual site will be dealt with in one or more sub-Projects

ANNEX C

SERVICE SCHEDULE 005

In-Span Interconnect and Interconnect Paths

This Service Schedule is effective from the date of signature of the Interconnect Agreement and shall remain in effect until amended following agreement of the Parties to such amendment or following determination by the National Regulator.

1 Definitions

1.1 In this Service Schedule, a reference to a clause or Appendix unless stated otherwise, is to a clause or Appendix of this Service Schedule. Words and expressions have the meaning given in Annex A.

Description of In Span Interconnect

2.1 Subject to the provisions of this Service Schedule, *eircom* shall provide the In-Span Interconnect ("ISI Bearer") in accordance with the description set out in Appendix 1. The ISI Bearer product is a separate and distinct product from the ISH Transport Link. The ISI Bearer product supports the two distinct types of Interconnect Paths described in this Service Schedule, including Extension Paths.

2.2 To facilitate the provision of Interconnect Paths between the Operator's Network and the *eircom* Network, the Operator may order the In-Span Interconnect.

2.3 The In-Span Interconnect requires the Operator to construct and maintain the transmission medium from their network to a point closer to the *eircom* Interconnect Node.

2.4 *eircom* will connect with a similar medium to this location in order to complete an end to end connection between the two Networks.

2.5 Interconnect Paths using the ISI Bearer shall be subject to Service Schedule 101 of the Interconnect Agreement.

3. Time Frame for Delivery

3.1 New Points of Interconnect utilising In-Span Interconnect must be ordered at least 17 weeks in advance of the requested Ready for Service date of the Interconnect Paths which are planned to be routed via this Point of Interconnect. The provision of In-Span Interconnect will be subject to the production by the Operator of proof that their terminal equipment has successfully completed inter-operability testing with the *eircom* equipment and that it conforms to the specification as defined in Section 6.3.2 of the

Technical Manual.

4. Charging

4.1 Charging for In-Span Interconnect shall be as set out in the *eircom* RIO Network Price List.

4.2 *eircom* shall be entitled to invoice and Operator shall be obligated to pay for In-Span Interconnect in accordance with the terms of this Service Schedule and as set out in Annex B.

4.3 The Operator shall be liable for the charges associated with the minimum period of service set out in Clause 5 in the event it issues a termination request that would take effect prior to the expiry of the minimum period of service.

5. Term

5.1 The minimum period of service for any In-Span Interconnect Bearer shall be 12 months from Commencement Date of Charging.

5.2 Each additional In-Span Interconnect Bearer shall be subject to its own minimum period of service of 12 months commencing on the Commencement Date of Charging.

5.3 In the event that the termination of an In-Span Interconnect Bearer is required, the Operator shall give to *eircom* in writing at least one months notice, expiring on the last day of the calendar month following that in which the notice is given. Where such a termination request takes effect prior to the expiry of the minimum period of specified in 5.1 above, then the charges for the In-Span Interconnect Bearer shall be as in Clause 4.3 above. Where notice is given which expires after the minimum period of service, charging shall cease on the last day of the notice period.

Appendix 1

Product Description

In-Span Interconnection (ISI)

eircom will offer a Synchronous Digital Hierarchy (SDH) ISI Interconnection at STM-1 and STM-4 where the other Party uses the same optical SDH interface as *eircom*. The ISI Interconnection will enable the provision of 2 Mbit/s Interconnect Paths only. The maximum capacity of the SDH Interconnection will be 63 x 2 Mbit/s at STM-1 and 252 x 2 Mbit/s at STM-4.

The Point of Interconnection (P.O.I.) of an ISI Interconnection is the point at which the optical fibres in the other Party's cable are connected to the optical fibres in the *eircom* cable. The requesting Party shall provide an Optical Distribution Frame (ODF) at the P.O.I. *eircom* will terminate its optical fibres on one side of the ODF and the other Party will terminate its fibres on the other side of the ODF.

Alternatively, the connection between the Operator fibre and the *eircom* fibre can be achieved through splicing.

The P.O.I. shall be located outside the boundary of the *eircom* interconnect node and shall be not more than 100 metres (duct length) from the boundary. *eircom* will identify suitable manholes within the immediate vicinity of its Interconnect Nodes which can facilitate the provision of In-Span connection. Where the Operator constructs their network to a point adjacent to such manholes, then no civil work charges will apply.

The maximum distance between the terminal ends of the ISI shall be determined with reference to the available optical power budget.

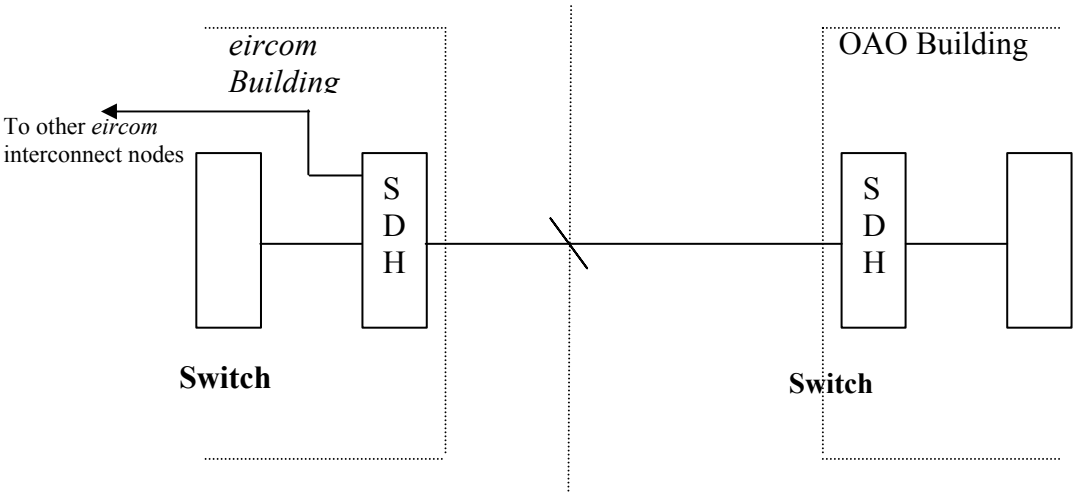

Point of Interconnection (optical)

SDH In-Span Hanover (ISH)

ANNEX C

SERVICE SCHEDULE 102

eircom National Termination

This Service Schedule is effective from the date of signature this Interconnect Agreement and shall remain in effect until amended following agreement of the Parties to such amendment or following determination by the National Regulator.

1. Definitions

1.1 In this Schedule, a reference to a clause or Appendix unless stated otherwise, is to a clause or Appendix of this Schedule. Words and expressions have the meaning given in Annex A of this Interconnect Agreement.

2. Description of Service

2.1 Subject to the provisions of this Service Schedule, *eircom* shall convey *eircom* National Termination Calls handed over from the Operator Network for termination to geographic number ranges in the *eircom* Network.

2.2 *eircom* National Termination Calls shall be limited to calls to geographic number ranges allocated to *eircom* by the National Regulator or numbers ported to the eircom Network by Geographic Number Portability.

3 Terms and Conditions

3.1 The Parties shall agree in advance all necessary technical requirements, including Call set-up and cleardown sequences, for the conveyance of Calls pursuant to this Schedule. This specification is identified in the Network Plan.

3.2 *eircom* shall convey *eircom* National Termination Calls during those periods of time and at the same standard and quality of service as *eircom* conveys all other Calls originated within the *eircom* Network.

3.3 Each Party shall correct faults which occur in its Network which affect the conveyance of *eircom* National Termination Calls in accordance with such Party's normal engineering practices. For the avoidance of doubt, neither Party warrants that its Network is, or will be, free from faults.

3.4 Calling Line Identity for network and presentation purposes shall, where available, be made available for all National Termination Calls presented for delivery in the *eircom* Network.

4. Routing

4.1 The conveyance of *eircom* National Termination Calls shall be in accordance with the routing principles specified in Appendix 1 and in the *eircom* Call Origination and Termination Routing Scheme. All Calls covered by this Service Schedule will be carried on Operator billed Interconnect Paths.

5. Charging

5.1 For the conveyance of *eircom* National Termination traffic by *eircom*, the Operator shall pay *eircom* a charge calculated in accordance with the rates as specified in the *eircom* RIO Price List, Service Schedule 102, *eircom* National Termination as published from time to time.

5.2 Charges for *eircom* National Termination calls shall be based on the actual Interconnect Node in the *eircom* Network through which they are connected. In the case where congestion of an Interconnect Link takes place and the Operator implements alternative routing, then the charge shall be based on the actual *eircom* Interconnect Node through which the call is connected after re-routing. There shall be no impact on the charge to the Operator for any alternative routing implemented, due to congestion within the *eircom* Network.

5.3 There shall be three basic charging levels for National Termination traffic. Charging at each level is time of day dependent. Traffic charging at each level shall be based on chargeable cumulative seconds for all appropriate National Termination traffic in each Billing Period rounded to the nearest minute as specified in the *eircom* RIO Price List, Service Schedule 102, *eircom* National Termination as published from time to time. The Operator shall also pay eircom the charge per call as specified in the *eircom* RIO Price List. The rates to be applied at each level are outlined in the eircom RIO Price List.

Appendix 1
to
SERVICE SCHEDULE 102

Routing Principles

1. The routing arrangements for *eircom* National Termination traffic shall be as defined herein.

2. *eircom* Primary Interconnect Nodes will accept *eircom* National Termination traffic destined for geographic number ranges in their Catchment Areas. No other traffic will be accepted at *eircom* Primary Interconnect Nodes.

3. *eircom* Tandem Interconnect Nodes will accept *eircom* National Termination traffic destined for all geographic number ranges.

4. *eircom* Tertiary Nodes will accept *eircom* National Termination traffic for all geographic number ranges.

5. The document "eircom Call Origination and Termination Routing Scheme", as amended from time to time, provides details of geographic number ranges in the *eircom* Network and the Interconnect Nodes at which each charging level will apply.

ANNEX C

SERVICE SCHEDULE 103

eircom Call Origination

This Service Schedule is effective from the date of signature of this Interconnect Agreement and shall remain in effect until amended following agreement of the Parties to such amendment or following determination by the National Regulator.

1. Definitions

1.1 In this Schedule, a reference to a clause or Appendix unless stated otherwise, is to a clause or Appendix of this Schedule. Words and expressions have the meaning given in Annex A.

2. Description of Service

2.1 Subject to the provisions of this Service Schedule, *eircom* shall convey *eircom* Call Origination Calls from geographic number ranges in the *eircom* Network to the Operator Network.

2.2 *eircom* Call Origination service shall comprise all calls with the leading digits: 13XXX being the carrier selection code for the Operator,
13YYY being the carrier access code for the Operator and
139ZZ being the carrier pre-selection code for the Operator.
These codes shall not be prefixed with any digits other than the CLIP and CLIR indicators.

3 Terms and Conditions

3.1 The Parties shall agree in advance all necessary technical requirements, including Call set-up and cleardown sequences, for the conveyance of Calls pursuant to this Schedule. This specification is identified in the Network Plan.

3.2 *eircom* shall convey *eircom* Call Origination Calls during those periods of time and at the same standard and quality of service as *eircom* conveys all other Calls originated within the *eircom* Network.

3.3 Each Party shall correct faults which occur in its Network which affect the conveyance of *eircom* Call Origination Calls in accordance with such Party's normal engineering practices. For the avoidance of doubt, neither Party warrants that its Network is, or will be, free from faults.

3.4 Calling Line Identity for network and presentation purposes shall, where available, be made available for all Call Origination Calls delivered from the *eircom* Network.

4. Routing

4.1 The conveyance of *eircom* Call Origination Calls shall be in accordance with the routing principles specified in Appendix 1 and in the eircom Call Origination and Termination Routing Scheme. All Calls covered by this Service Schedule will be carried on Operator billed Interconnect Paths.

5. Charging

5.1 For the conveyance of *eircom* Call Origination traffic by *eircom*, the Operator shall pay *eircom* a charge calculated in accordance with the rates as specified in the *eircom* RIO Price List, Service Schedule 103, *eircom* Call Origination as published from time to time.

5.2 Charges for *eircom* Call Origination Calls shall be based on the actual Interconnect Node in the *eircom* Network through which they are connected. In the case where congestion of an Interconnect Link takes place and alternative routing is implemented, then the charge shall be based on the actual *eircom* Interconnect Node through which the Call is connected after re-routing. There shall be no impact on the charge to the Operator for any alternative routing implemented, due to congestion within the *eircom* Network.

5.3 There shall be three basic charges for Call Origination traffic. Charging at each level is time of day dependent. Traffic charging at each level shall be based on the number of chargeable Calls and cumulative seconds for all appropriate Call Origination traffic in each Billing Period rounded to the nearest minute as specified in the *eircom* RIO Price List, Service Schedule 103, *eircom* Call Origination as published from time to time. The operator shall also pay *eircom* the charge per call as specified in the *eircom* RIO Price List.

Appendix 1
to
SERVICE SCHEDULE 103
Routing Principles

1. The routing arrangements for *eircom* Call Origination traffic shall be as defined therein.

2. *eircom* Primary Interconnect Nodes to which the Operator has interconnected will deliver *eircom* Call Origination traffic from geographic number ranges in their Catchment Areas. No other *eircom* Call Origination traffic will be delivered at *eircom* Primary Interconnect Nodes.

3. *eircom* Tandem Interconnect Nodes to which the Operator has interconnected will deliver *eircom* Call Origination traffic from geographic number ranges in their Catchment Areas, the Catchment areas of their controlled Primary Interconnect Nodes and the Catchment area of Tandem Interconnect Nodes for which they have been nominated as the final overflow route. In the case where Tandem Interconnect Nodes are twinned, Interconnect Links must be established to both *eircom* Tandem Interconnect Nodes in order to gain full access to this Catchment Area. No other *eircom* Call Origination traffic will be accepted at *eircom* Tandem Interconnect Nodes.

3.1 If Interconnect Links are established to only one of the *eircom* Tandem Interconnect Nodes where twinned *eircom* Tandem Interconnect Nodes exist, then this Interconnect Link shall be treated as if it were a *eircom* Primary Interconnect Node with only *eircom* Call Origination traffic from geographic number ranges directly connected to that Node and a percentage of the traffic from controlled Primary Interconnect Nodes delivered.

4. *eircom* Tertiary Nodes will deliver *eircom* Call Origination traffic for all geographic number ranges.

5. The document "*eircom* Call Origination and Termination Routing Scheme", as amended from time to time, provides detail of the number ranges in the Catchment Area of each of Primary Interconnect Nodes offered by *eircom*. It also provides detail of the Tandem Interconnect Nodes for each number range.

ANNEX C

SERVICE SCHEDULE 105

Access to *eircom* Premium Rate Services

This Service Schedule is effective from the date of signature of this Interconnect Agreement and shall remain in effect until amended following agreement of the Parties to such amendment or following determination by the National Regulator.

1. Definitions

1.1 In this Schedule, a reference to a clause or Appendix unless stated otherwise, is to a clause or Appendix of this Schedule. Words and expressions have the meaning given in Annex A, except as shown below.

2. Description of Service

2.1 Subject to the provisions of this Service Schedule, *eircom* shall convey *eircom* Premium Rate Services Access Calls handed over from the Operator Network for delivery to Premium Rate Services provided by *eircom*. This shall comprise of all *eircom* calls with the leading digits "15XX" excluding 1511 which have been allocated to *eircom* by the National Regulator or ported into the *eircom* network.

3 Terms and Conditions

3.1 The Parties shall agree in advance all necessary technical requirements, including Call set-up and cleardown sequences, for the conveyance of Calls pursuant to this Schedule. This specification is identified in the Network Plan.

3.2 *eircom* shall convey *eircom* Premium Rate Services Access Calls during those periods of time and at the same standard and quality of service as *eircom* conveys similar Calls originated within the *eircom* Network.

3.3 Each Party shall correct faults which occur in its Network which affect the conveyance of *eircom* Premium Rate Services Access Calls in accordance with such Party's normal engineering practices. For the avoidance of doubt, neither Party warrants that its Network is, or will be, free from faults.

3.4 Calling Line Identity for network and presentation purposes shall, where available, be made available for all *eircom* Premium Rate Access calls presented for delivery in the *eircom* Network. In the event that the full Calling Line Identity is not available, the National Destination Code of the caller's number shall be made available instead.

4. Routing

4.1 The conveyance of *eircom* Premium Rate Services Access Calls shall be in accordance with the routing principles specified in the Network Plan and all such Calls shall be delivered to the *eircom* Tertiary Interconnect Nodes only. All Calls covered by this Service Schedule will be carried on *eircom* billed Interconnect Paths.

5. Charging

5.1 For the conveyance of *eircom* Premium Rate Services Access calls by *eircom*, the Operator shall pay *eircom* a charge per call and/or per minute as specified in the *eircom* RIO Price List, Service Schedule 105 Access to *eircom* Premium Rate Services as published from time to time. Per minute traffic charging at each charge shall be based on chargeable cumulative seconds for each Billing Period rounded to the nearest minute.

ANNEX C

SERVICE SCHEDULE 106

Access to *eircom* Freefone Service

This Service Schedule is effective from the date of signature of this Interconnect Agreement and shall remain in effect until amended following agreement of the Parties to such amendment or following determination by the National Regulator.

1. Definitions

1.1 In this Schedule, a reference to a clause or Appendix unless stated otherwise, is to a clause or Appendix of this Schedule. Words and expressions have the meaning given in Annex A, except as shown below.

"PAC Eligible Payphone"
means payphones for which an operator is authorised to request the application of the payphone category to its line for the purpose of recovering the PAC, listed in the A-number database for PAC ("A-Number Database") in accordance with ComReg's requirements.

"**Payphone Access Charge**" or "**PAC**"
is the additional origination charge the terminating operator has to pay to the originating operator for access to the Freefone Service from PAC Eligible Payphones.

2. Description of Service

2.1 Subject to the provisions of this Service Schedule, *eircom* shall convey *eircom* Freefone Service Access Calls handed over from the Operator Network for delivery to Freefone services provided by *eircom*. This shall comprise all *eircom* calls with the leading digits "180" which have been allocated to *eircom* by the National Regulator or ported into the *eircom* network.

2.2 Subject to the provisions of this Schedule, where the call originates on a PAC eligible Payphone, the PAC shall be provided in accordance with the Payphone Access Charge Inter Operator Process Manual ("PAC IPM"), the Payphone Access Charge Product Description ("PAC Product Description") and the Payphone Access Charge Accounting Principles ("PAC-AP"). The controlling document is the latest version of the above titled documents published on eircom's website as agreed with the National Regulator following negotiation with industry, if appropriate.

3 Terms and Conditions

3.1 The Parties shall agree in advance all necessary technical requirements, including Call set-up and cleardown sequences, for the conveyance of Calls pursuant to this Schedule. This specification is identified in the Network Plan.

3.2 *eircom* shall convey *eircom* Freefone Access Calls during those periods of time and at the same standard and quality of service as *eircom* conveys similar Calls originated within the *eircom* Network.

3.3 Each Party shall correct faults which occur in its Network which affect the conveyance of *eircom* Freefone Access Calls in accordance with such Party's normal engineering practices. For the avoidance of doubt, neither Party warrants that its Network is, or will be, free from faults.

3.4 Calling Line Identity for network and presentation purposes shall, where available, be made available for all *eircom* Freefone Access Calls presented for delivery in the *eircom* Network. In the event that the full Calling Line Identity is not available, the National Destination Code of the caller's number shall be made available instead.

3.5 The provision, operation and maintenance relating to PAC shall be as set out in the PAC IPM.

4. Routing

4.1 The conveyance of *eircom* Freefone Service Access Calls shall be in accordance with the routing principles specified in the Network Plan and all such Calls shall be delivered to the *eircom* Tertiary Interconnect Nodes. All Calls covered by this Service Schedule will be carried on *eircom* billed Interconnect Paths.

5. Charging

5.1 For the delivery of *eircom* Freefone Service Access calls from the Operator Network (other than from PAC Eligible Payphones), *eircom* shall pay the Operator a charge per call and/or per minute calculated in accordance with the rates as specified in the *eircom* RIO Price List, Service Schedule 106 Access to *eircom*'s Freefone Service as published from time to time. Per minute traffic charging at each charge shall be based on chargeable cumulative seconds for each Billing Period rounded to the nearest minute.

5.2 For the delivery of *eircom* Freefone Service Access calls from Operator PAC Eligible Payphones, eircom shall pay the Operator a charge calculated in accordance with the rates as specified in the *eircom* RIO Price List, Service Schedule 106, Access to *eircom* Freefone Service as published from time to time. Per minute traffic charging at each charge shall be based on chargeable cumulative seconds for each Billing Period rounded to the nearest minute.

ANNEX C

SERVICE SCHEDULE 107

Access to *eircom* LoCall Service

This Service Schedule is effective from the date of signature of this Interconnect Agreement and shall remain in effect until amended following agreement of the Parties to such amendment or following determination by the National Regulator.

1. Definitions

1.1 In this Schedule, a reference to a clause or Appendix unless stated otherwise, is to a clause or Appendix of this Schedule. Words and expressions have the meaning given in Annex A, except as shown below.

2. Description of Service

2.1 Subject to the provisions of this Service Schedule, *eircom* shall convey *eircom* LoCall Service Access Calls handed over from the Operator Network for delivery to LoCall Services provided by *eircom*. This shall comprise all *eircom* calls with the leading digits "1890" which have been allocated to *eircom* by the National Regulator or ported into the *eircom* network.

3 Terms and Conditions

3.1 The Parties shall agree in advance all necessary technical requirements, including Call set-up and cleardown sequences, for the conveyance of Calls pursuant to this Schedule. This specification is identified in the Network Plan.

3.2 *eircom* shall convey *eircom* LoCall Access Calls during those periods of time and at the same standard and quality of service as *eircom* conveys similar Calls originated within the *eircom* Network.

3.3 Each Party shall correct faults which occur in its Network which affect the conveyance of *eircom* LoCall Access Calls in accordance with such Party's normal engineering practices. For the avoidance of doubt, neither Party warrants that its Network is, or will be, free from faults.

3.4 Calling Line Identity for network and presentation purposes shall, where available, be made available for all *eircom* LoCall Access Calls presented for delivery in the *eircom* Network. In the event that the full Calling Line Identity is not available, the National Destination Code of the caller's number shall be made available instead.

4. Routing

4.1 The conveyance of *eircom* LoCall Service Access Calls shall be in accordance with the routing principles specified in the Network Plan and all such Calls shall be delivered to the *eircom* Tertiary Interconnect Nodes only. All Calls covered by this Service Schedule will be carried on *eircom* billed Interconnect Paths.

5. Charging

5.1 For the delivery of *eircom* LoCall Service Access calls from the Operator Network, the Operator shall pay *eircom* a charge per call and/or per minute calculated in accordance with the rates as specified in the *eircom* RIO Price List, Service Schedule 107, Access to *eircom*'s LoCall Service as published from time to time. Per minute traffic charging at each charge shall be based on chargeable cumulative seconds for each Billing Period rounded to the nearest minute.

ANNEX C

SERVICE SCHEDULE 108

Access to *eircom* Callsave Service

This Service Schedule is effective from the date of signature of this Interconnect Agreement and shall remain in effect until amended following agreement of the Parties to such amendment or following determination by the National Regulator.

1. Definitions

1.1 In this Schedule, a reference to a clause or Appendix unless stated otherwise, is to a clause or Appendix of this Schedule. Words and expressions have the meaning given in Annex A, except as shown below.

2. Description of Service

2.1 Subject to the provisions of this Service Schedule, *eircom* shall convey *eircom* Callsave Service Access Calls handed over from the Operator Network for delivery to Callsave Services provided by *eircom*. This shall comprise all *eircom* calls with the leading digits "1850" which have been allocated to *eircom* by the National Regulator or ported into the *eircom* network.

3 Terms and Conditions

3.1 The Parties shall agree in advance all necessary technical requirements, including Call set-up and cleardown sequences, for the conveyance of Calls pursuant to this Schedule. This specification is identified in the Network Plan.

3.2 *eircom* shall convey *eircom* Callsave Access Calls during those periods of time and at the same standard and quality of service as *eircom* conveys similar Calls originated within the *eircom* Network.

3.3 Each Party shall correct faults which occur in its Network which affect the conveyance of *eircom* Callsave Access Calls in accordance with such Party's normal engineering practices. For the avoidance of doubt, neither Party warrants that its Network is, or will be, free from faults.

3.4 Calling Line Identity for network and presentation purposes shall, where available, be made available for all *eircom* CallSave Access Calls presented for delivery in the *eircom* Network. In the event that the full Calling Line Identity is not available, the National Destination Code of the caller's number shall be made available instead.

4. Routing

4.1 The conveyance of *eircom* Callsave Service Access Calls shall be in accordance with the routing principles specified in the Network Plan and all such Calls shall be delivered to the *eircom* Tertiary Interconnect Nodes only. All Calls covered by this Service Schedule will be carried on *eircom* billed Interconnect Paths.

5. Charging

5.1 For the delivery of *eircom* CallSave Service Access calls from the Operator Network, the Operator shall pay *eircom* a charge per call and/or per minute calculated in accordance with the rates as specified in the *eircom* RIO Price List, Service Schedule 108 Access to *eircom*'s Callsave Service as published from time to time. Per minute traffic charging at each charge shall be based on chargeable cumulative seconds for each Billing Period rounded to the nearest minute.

ANNEX C

SERVICE SCHEDULE 109

Access to eircom Universal Number Service

This Service Schedule is effective from the date of signature of this Interconnect Agreement and shall remain in effect until amended following agreement of the Parties to such amendment or following determination by the National Regulator.

1. Definitions

1.1 In this Schedule, a reference to a clause or Appendix unless stated otherwise, is to a clause or Appendix of this Schedule. Words and expressions have the meaning given in Annex A.

2. Description of Service

2.1 Subject to the provisions of this Service Schedule, *eircom* shall convey *eircom* Universal Access Service Calls handed over from the Operator Network to Universal Access Services provided by *eircom*. This shall comprise all calls with the leading digits "0818" which have been allocated to *eircom* by the National Regulator or ported into the *eircom* network.

3 Terms and Conditions

3.1 The Parties shall agree in advance all necessary technical requirements, including Call set-up and cleardown sequences, for the conveyance of Calls pursuant to this Schedule. This specification is identified in the Network Plan.

3.2 *eircom* shall convey *eircom* Universal Access Service Calls during those periods of time and at the same standard and quality of service as *eircom* conveys similar Calls originated within the *eircom* Network.

3.3 Each Party shall correct faults which occur in its Network which affect the conveyance of *eircom* Universal Access Service Calls in accordance with such Party's normal engineering practices. For the avoidance of doubt, neither Party warrants that its Network is, or will be, free from faults.

3.4 Calling Line Identity for network and presentation purposes shall, where available, be made available for all *eircom* Universal Access Service Calls presented for delivery in the *eircom* Network.

4. Routing

4.1 The conveyance of *eircom* Universal Access Service Calls shall be in accordance with the routing principles specified in the Network Plan. All Calls covered by this Service Schedule will be carried on *eircom* billed Interconnect Paths.

5. Charging

5.1 For the delivery of *eircom* Universal Access Service calls from the Operator Network, the Operator shall pay *eircom* a charge per call and/or per minute calculated in accordance with the rates as specified in the *eircom* RIO Price List, Service Schedule 109, *eircom* Universal Access Service as published from time to time. Per minute traffic charging at each charge shall be based on chargeable cumulative seconds for each Billing Period rounded to the nearest minute.

ANNEX C

SERVICE SCHEDULE 110

Access to *eircom* Personal Numbering Service

This Service Schedule is effective from the date of signature of this Interconnect Agreement and shall remain in effect until amended following agreement of the Parties to such amendment or following determination by the National Regulator.

1. Definitions

1.1 In this Schedule, a reference to a clause or Appendix unless stated otherwise, is to a clause or Appendix of this Schedule. Words and expressions have the meaning given in Annex A.

2. Description of Service

2.1 Subject to the provisions of this Service Schedule, *eircom* shall convey *eircom* Personal Numbering Calls handed over from the Operator Network to Personal Numbering Services provided by *eircom*. This shall comprise all calls with the leading digits "0700" which have been allocated to *eircom* by the National Regulator or ported into the *eircom* network.

3 Terms and Conditions

3.1 The Parties shall agree in advance all necessary technical requirements, including Call set-up and cleardown sequences, for the conveyance of Calls pursuant to this Schedule. This specification is identified in the Network Plan.

3.2 *eircom* shall convey *eircom* Personal Numbering Calls during those periods of time and at the same standard and quality of service as *eircom* conveys similar Calls originated within the *eircom* Network.

3.3 Each Party shall correct faults which occur in its Network which affect the conveyance of *eircom* Personal Numbering Calls in accordance with such Party's normal engineering practices. For the avoidance of doubt, neither Party warrants that its Network is, or will be, free from faults.

3.4 Calling Line Identity for network and presentation purposes shall, where available, be made available for all *eircom* Personal Numbering Calls presented for delivery in the *eircom* Network.

4. Routing

4.1 The conveyance of *eircom* Personal Numbering Calls shall be in accordance with the routing principles specified in the Network Plan. All Calls covered by this Service Schedule will be carried on *eircom* billed Interconnect Paths.

5. Charging

5.1 For the delivery of *eircom* Personal Numbering Service calls from the Operator Network, the Operator shall pay *eircom* a charge per call and/or per minute calculated in accordance with the rates as specified in the *eircom* RIO Price List, Service Schedule 110 *eircom* Personal Numbering Service as published from time to time. Per minute traffic charging at each charge shall be based on chargeable cumulative seconds for each Billing Period rounded to the nearest minute.

ANNEX C

SERVICE SCHEDULE 111

eircom National Directory Enquires

This Service Schedule is effective from the date of signature of this Interconnect Agreement and shall remain in effect until amended following agreement of the Parties to such amendment or following determination by the National Regulator.

1. Definitions

1.1 In this Schedule, a reference to a clause or Appendix unless stated otherwise, is to a clause or Appendix of this Schedule. Words and expressions have the meaning given in Annex A.

2. Description of Service

2.1 Subject to the provisions of this Service Schedule, *eircom* shall convey *eircom* National Directory Enquiry Calls handed over from the Operator Network to an *eircom* operator centre. This shall comprise all traffic with the leading digits "11811". The National Directory Enquiry service offered shall be the same as that offered to customers directly connected to the *eircom* Network.

3 Terms and Conditions

3.1 The Parties shall agree in advance all necessary technical requirements, including Call set-up and cleardown sequences, for the conveyance of Calls pursuant to this Schedule. This specification is identified in the Network Plan.

3.2 *eircom* shall convey *eircom* National Directory Enquiry Calls during those periods of time and at the same standard and quality of service as *eircom* conveys similar Calls originated within the *eircom* Network.

3.3 Each Party shall correct faults which occur in its Network which affect the conveyance of *eircom* National Directory Enquiry Calls in accordance with such Party's normal engineering practices. For the avoidance of doubt, neither Party warrants that its Network is, or will be, free from faults.

3.4 Calling Line Identity for network and presentation purposes shall, where available, be made available for all National Directory Enquiry Calls presented for delivery in the *eircom* Network.

4. Routing

4.1 The conveyance of *eircom* National Directory Enquiry Calls shall be in accordance with the routing principles specified in the Network Plan and all such Calls shall be delivered to the *eircom* Tertiary Interconnect Nodes only. All Calls covered by this Service Schedule will be carried on Operator billed Interconnect Paths.

5. Charging

5.1 For the handling of *eircom* National Directory Enquiry Calls from the Operator Network by *eircom*, the Operator shall pay to *eircom* the charges as set out in the *eircom* RIO Price List, Service Schedule 111, *eircom* National Directory Enquiries as published from time to time. A *eircom* National Directory Enquiry Call shall provide a maximum of three (3) listings per enquiry.

ANNEX C

SERVICE SCHEDULE 112

eircom International Directory Enquires

This Service Schedule is effective from the date of signature of this Interconnect Agreement and shall remain in effect until amended following agreement of the Parties to such amendment or following determination by the National Regulator.

1. Definitions

1.1 In this Schedule, a reference to a clause or Appendix unless stated otherwise, is to a clause or Appendix of this Schedule. Words and expressions have the meaning given in Annex A.

2. Description of Service

2.1 Subject to the provisions of this Service Schedule, *eircom* shall convey *eircom* International Directory Enquiry Calls handed over from the Operator Network to an *eircom* operator centre. This shall comprise all traffic with the digits "11818". The International Directory Enquiry service offered shall be the same as that offered to customers directly connected to the *eircom* Network.

3 Terms and Conditions

3.1 The Parties shall agree in advance all necessary technical requirements, including Call set-up and cleardown sequences, for the conveyance of Calls pursuant to this Schedule. This specification is identified in the Network Plan.

3.2 *eircom* shall convey *eircom* International Directory Enquiry Calls during those periods of time and at the same standard and quality of service as *eircom* conveys similar Calls originated within the *eircom* Network.

3.3 Each Party shall correct faults which occur in its Network which affect the conveyance of *eircom* International Directory Enquiry Calls in accordance with such Party's normal engineering practices. For the avoidance of doubt, neither Party warrants that its Network is, or will be, free from faults.

3.4 Calling Line Identity for network and presentation purposes shall, where available, be made available for all *eircom* International Directory Enquiry Calls presented for delivery in the *eircom* Network.

4. Routing

4.1 The conveyance of *eircom* International Directory Enquiry Calls shall be in accordance with the routing principles specified in the Network Plan and all such Calls shall be delivered to the *eircom* Tertiary Interconnect Nodes only. All Calls covered by this Service Schedule will be carried on Operator billed Interconnect Paths.

5. Charging

5.1 For the handling of *eircom* International Directory Enquiry Calls from the Operator Network by *eircom*, the Operator shall pay to *eircom* a charge as set out in the *eircom* RIO Price List, Service Schedule 112, *eircom* International Directory Enquiries as published from time to time. An International Directory Enquiry Call shall provide a maximum of three (3) listings per enquiry.

ANNEX C

SERVICE SCHEDULE 113

eircom National Operator Assistance

This Service Schedule is effective from the date of signature of this Interconnect Agreement and shall remain in effect until amended following agreement of the Parties to such amendment or following determination by the National Regulator.

1. Definitions

1.1 In this Schedule, a reference to a clause or Appendix unless stated otherwise, is to a clause or Appendix of this Schedule. Words and expressions have the meaning given in Annex A.

2. Description of Service

2.1 Subject to the provisions of this Service Schedule, *eircom* shall convey *eircom* National Operator Assistance Calls handed over from the Operator Network to a *eircom* operator centre. This shall comprise all traffic with the digits "10". The National Operator Assistance service offered shall be the same as that offered to customers directly connected to the *eircom* Network. This shall include, but is not limited to, station to station and person to person Calls.

3 Terms and Conditions

3.1 The Parties shall agree in advance all necessary technical requirements, including Call set-up and cleardown sequences, for the conveyance of Calls pursuant to this Schedule. This specification is identified in the Network Plan.

3.2 *eircom* shall convey *eircom* National Operator Assistance Calls during those periods of time and at the same standard and quality of service as *eircom* conveys similar Calls originated within the *eircom* Network.

3.3 Each Party shall correct faults which occur in its Network which affect the conveyance of *eircom* National Operator Assistance Calls in accordance with such Party's normal engineering practices. For the avoidance of doubt, neither Party warrants that its Network is, or will be, free from faults.

3.4 Calling Line Identity for network and presentation purposes shall, where available, be made available for all National Operator Assistance Calls presented for delivery in the *eircom* Network.

3.5 Subject to bi-lateral agreement on the necessary technical and commercial conditions, *eircom* shall convey reverse charge calls to the Operator Network.

4. Routing

4.1 The conveyance of *eircom* National Operator Assistance Calls shall be in accordance with the routing principles specified in the Network Plan and all such Calls shall be delivered to the *eircom* Tertiary Interconnect Nodes only. All Calls covered by this Service Schedule will be carried on Operator billed Interconnect Paths.

5. Charging

5.1 For the handling of *eircom* National Operator Assistance Calls from the Operator Network by *eircom*, the Operator shall pay to *eircom* both the per call and per minute charges as set out in the *eircom* RIO Price List, Service Schedule 113, *eircom* National Operator Assistance as published from time to time. Traffic charging at each charge shall be based on chargeable cumulative seconds for each Billing Period rounded to the nearest minute.

ANNEX C

SERVICE SCHEDULE 114

eircom International Operator Assistance Service

This Service Schedule is effective from the date of signature of this Interconnect Agreement and shall remain in effect until amended following agreement of the Parties to such amendment or following determination by the National Regulator.

1. Definitions

1.1 In this Schedule, a reference to a clause or Appendix unless stated otherwise, is to a clause or Appendix of this Schedule. Words and expressions have the meaning given in Annex A.

2. Description of Service

2.1 Subject to the provisions of this Service Schedule, *eircom* shall convey *eircom* International Operator Assistance Calls, that is Calls to all other countries excluding Ireland and the U.K., handed over from the Operator Network to a *eircom* operator centre. This shall comprise all traffic with the digits "114". The International Operator Assistance service offered shall be the same as that offered to customers directly connected to the *eircom* Network.

3 Terms and Conditions

3.1 The Parties shall agree in advance all necessary technical requirements, including Call set-up and cleardown sequences, for the conveyance of Calls pursuant to this Schedule. This specification is identified in the Network Plan.

3.2 *eircom* shall convey *eircom* International Operator Assistance Calls during those periods of time and at the same standard and quality of service as *eircom* conveys similar Calls originated within the *eircom* Network.

3.3 Each Party shall correct faults which occur in its Network which affect the conveyance of *eircom* International Operator Assistance Calls in accordance with such Party's normal engineering practices. For the avoidance of doubt, neither Party warrants that its Network is, or will be, free from faults.

3.4 Calling Line Identity for network and presentation purposes shall, where available, be made available for all *eircom* International Operator Assistance Calls presented for delivery in the *eircom* Network.

4. Routing

4.1 The conveyance of *eircom* International Operator Assistance Calls shall be in accordance with the routing principles specified in the Network Plan and all such Calls shall be delivered to the *eircom* Tertiary Interconnect Nodes only. All Calls covered by this Service Schedule will be carried on Operator billed Interconnect Paths.

5. Charging

5.1 For the handling of *eircom* International Operator Assistance Calls from the Operator Network by *eircom*, the Operator shall pay to *eircom* both the per call and per minute charges as set out in the *eircom* RIO Price List, Service Schedule 114, *eircom* International Operator Assistance Service as published from time to time. Traffic charging at each charge shall be based on chargeable cumulative seconds for each Billing Period rounded to the nearest minute.

ANNEX C

SERVICE SCHEDULE 115

Access to Emergency Services (999/112)

This Service Schedule is effective from the date of signature of this Interconnect Agreement and shall remain in effect until amended following agreement of the Parties to such amendment or following determination by the National Regulator.

1. Definitions

1.1 In this Schedule, a reference to a clause or Appendix unless stated otherwise, is to a clause or Appendix of this Schedule. Words and expressions have the meaning given in Annex A.

2. Description of Service

2.1 Subject to the provisions of this Service Schedule, *eircom* shall convey Emergency Services Calls handed over from the Operator Network for delivery to the relevant emergency service body connected to the *eircom* Network. This shall comprise all traffic with the digits "999" or "112".

3 Terms and Conditions

3.1 The Parties shall agree in advance all necessary technical requirements, including Call set-up and cleardown sequences, for the conveyance of Calls pursuant to this Schedule. This specification is identified in the Network Plan.

3.2 *eircom* shall convey, subject to the provisions of Clause 4 hereof, Emergency Services Calls during those periods of time and at the same standard and quality of service as *eircom* conveys similar Calls originated within the *eircom* Network.

3.3 Each Party shall correct faults which occur in its Network which affect the conveyance of Emergency Services Calls in accordance with such Party's normal engineering practices. For the avoidance of doubt, neither Party warrants that its Network is, or will be, free from faults.

3.4 Calling Line Identity for network and presentation purposes shall, where available, be made available for all Emergency Services Calls presented for delivery in the *eircom* Network.

4 Operator Obligations

4.1 For an interim period the Operator shall meet the obligations in clauses 4.3, 4.4 and 4.5 hereof. Both Parties shall make their best endeavours to minimise the duration of this interim period.

4.2 Clause 3.2 hereof provides that *eircom* shall convey emergency service calls during those periods of time and that the same standard and quality of service as *eircom* conveys similar calls originated within the *eircom* network. In order for *eircom* to honour its obligations under clause 3.2 the Operator shall be obliged to undertake the following obligations.

4.3 In the event of the emergency authorities requesting the calling number and, or name and address within one hour of the call being received for the purpose of,

(i) security of state,
(ii) detection and prevention of crime
(iii) safety and protection of life and property

eircom will provide the relevant details which are available to the emergency services. In order to enable *eircom* to honour this obligation it is incumbent upon the Operator to provide *eircom* with details of the caller name and address of the Operator customer where the emergency authorities request *eircom* to provide such calling number and, or name and address.

4.4 It is the sole responsibility of the Operator to ensure that all the necessary safeguards and protections are in place to allow it to disclose such information to *eircom* without incurring a breach of the relevant data protection legislation.

4.5 The honouring of *eircom* of its obligations with regards to standard and quality of service outlined in Clause 3.2 of this Annex is contingent upon the Operator honouring the obligations outlined herein.

5. Routing

5.1 The conveyance of Emergency Services Calls shall be in accordance with the routing principles specified in the Network Plan and all such Calls will be delivered to the *eircom* Tertiary Interconnect Nodes where possible but this these Calls will be accepted at all *eircom* Interconnect Nodes. All Calls covered by this Service Schedule will be carried on Operator billed Interconnect Paths.

6. Charging

6.1 For the delivery of *eircom* Emergency Service Access traffic from the Operator Network, the Operator shall pay *eircom* a charge per minute calculated in accordance with the rates as specified in the *eircom* RIO Price List, Service Schedule 115, Emergency Services as published from to time. Traffic charging at each charge shall be based on chargeable cumulative seconds for each Billing Period rounded to the nearest minute.

6.2 In addition to these conveyance charge, *eircom* may introduce a charge to cover the emergency call centre costs following approval by the National Regulator.

ANNEX C

SERVICE SCHEDULE 116

Access to *eircom* Packet Services

This Service Schedule is effective from the date of signature of this Interconnect Agreement and shall remain in effect until amended following agreement of the Parties to such amendment or following determination by the National Regulator.

1. Definitions

1.1 In this Schedule, a reference to a clause or Appendix unless stated otherwise, is to a clause or Appendix of this Schedule. Words and expressions have the meaning given in Annex A.

2. Description of Service

2.1 Subject to the provisions of this Service Schedule, *eircom* shall convey Packet Services Access Calls handed over from the Operator Network for delivery to Operators connected to the *eircom* Network. This shall comprise all traffic with the leading digits "1511".

3 Terms and Conditions

3.1 The Parties shall agree in advance all necessary technical requirements, including Call set-up and cleardown sequences, for the conveyance of Calls pursuant to this Schedule. This specification is identified in the Network Plan.

3.2 *eircom* shall convey Packet Services Access Calls during those periods of time and at the same standard and quality of service as *eircom* conveys similar Calls originated within the *eircom* Network.

3.3 Each Party shall correct faults which occur in its Network which affect the conveyance of Packet Services Access Calls in accordance with such Party's normal engineering practices. For the avoidance of doubt, neither Party warrants that its Network is, or will be, free from faults.

3.4 Calling Line Identity for network and presentation purposes shall, where available, be made available for all Packet Switch Access Calls presented for delivery in the *eircom* Network.

4. Routing

4.1 The conveyance of Packet Services Access Calls shall be in accordance with the routing principles specified in the Network Plan and all such Calls shall be delivered to the *eircom* Tertiary Interconnect Nodes only. All Calls covered by this Service Schedule will be carried on Operator billed Interconnect Paths.

5. Charging

5.1 For the delivery of Packet Services Access traffic from the Operator Network, the Operator shall pay *eircom* a charge calculated in accordance with the rates as specified in the *eircom* RIO Price List, Service Schedule 116, Packet Services Access as published from time to time. Traffic charging at each charge shall be based on chargeable cumulative seconds for each Billing Period rounded to the nearest minute.

ANNEX C

SERVICE SCHEDULE 118

eircom Customer Care Access

This Service Schedule is effective from the date of signature of this Interconnect Agreement and shall remain in effect until amended following agreement of the Parties to such amendment or following determination by the National Regulator.

1. Definitions

1.1 In this Schedule, a reference to a clause or Appendix unless stated otherwise, is to a clause or Appendix of this Schedule. Words and expressions have the meaning given in Annex A.

2. Description of Service

2.1 Subject to the provisions of this Service Schedule, *eircom* shall convey *eircom* Customer Care Access Calls handed over from the Operator Network for delivery to Operators connected to the *eircom* Network. This shall comprise all traffic with the leading digits "1901".

3 Terms and Conditions

3.1 The Parties shall agree in advance all necessary technical requirements, including Call set-up and cleardown sequences, for the conveyance of Calls pursuant to this Schedule. This specification is identified in the Network Plan.

3.2 The Operator shall convey *eircom* Customer Care Access Calls during those periods of time and at the same standard and quality of service as *eircom* conveys similar Calls originated within the *eircom* Network.

3.3 Each Party shall correct faults which occur in its Network which affect the conveyance of *eircom* Customer Care Access Calls in accordance with such Party's normal engineering practices. For the avoidance of doubt, neither Party warrants that its Network is, or will be, free from faults.

3.4 Calling Line Identity for network and presentation purposes shall, where available, be made available for all *eircom* Customer Care Calls presented for delivery in the *eircom* Network.

4. Routing

4.1 The conveyance of *eircom* Customer Care Access Calls shall be in accordance with the routing principles specified in the Network Plan and all such Calls shall be delivered to the *eircom* Tertiary Interconnect Nodes. All Calls covered by this Service Schedule will be carried on *eircom* billed Interconnect Paths.

5. Charging

5.1 The delivery of *eircom* Customer Care Access Calls from the Operator Network shall be done on a free of charge basis and *eircom* will commit to reciprocal arrangements if the Operator should be granted a Customer Care code at some time in the future

ANNEX C

SERVICE SCHEDULE 119

International Access including Northern Ireland

This Service Schedule is effective from the date of signature of this Interconnect Agreement and shall remain in effect until amended following agreement of the Parties to such amendment or following determination by the National Regulator.

1. Definitions

1.1 In this Schedule, a reference to a clause or Appendix unless stated otherwise, is to a clause or Appendix of this Schedule. Words and expressions have the meaning given in Annex A of this Interconnect Agreement.

2. Description of Service

2.1 Subject to the provisions of this Service Schedule, *eircom* shall convey International Access Calls including Calls destined for Northern Ireland handed over from the Operator Network for delivery through the *eircom* international network. This shall comprise all traffic with the leading digits "00" as well as traffic with the leading digits "048". There are a small number of international destinations where a supplementary charge may apply for un-restricted 64k\s services. Until these charges are agreed with the National Regulator, the rates set out in this Service Schedule will apply.

3 Terms and Conditions

3.1 The Parties shall agree in advance all necessary technical requirements, including Call set-up and cleardown sequences, for the conveyance of Calls pursuant to this Schedule. This specification is identified in the Network Plan.

3.2 *eircom* shall convey International Access Calls including Northern Ireland Calls during those periods of time and at the same standard and quality of service as *eircom* conveys similar Calls originated within the *eircom* Network.

3.3 Each Party shall correct faults which occur in its Network which affect the conveyance of International Access including Northern Ireland Calls in accordance with such Party's normal engineering practices. For the avoidance of doubt, neither Party warrants that its Network is, or will be, free from faults.

3.4 Calling Line Identity for network and presentation purposes shall, where available, be made available for all International Access Calls presented for delivery in the *eircom* Network.

4. Routing

4.1 The conveyance of International Access including Northern Ireland Calls shall be in accordance with the routing principles specified in the Network Plan and all such Calls shall be delivered to the *eircom* Tertiary Interconnect Nodes only.

5 Charging

5.1 International Access Calls will be charged in accordance with the rates as specified in the *eircom* RIO Price List, Service Schedule 119, International Access including Northern Ireland as published from time to time. Traffic charging at each charge shall be based on chargeable cumulative seconds for all appropriate International Access traffic in each Billing Period rounded to the nearest minute.

ANNEX C

SERVICE SCHEDULE 120

eircom Carrier Pre-Selection (CPS) Service

This Service Schedule is effective from the 1st January 2000 and shall remain in effect until amended following agreement of the Parties to such amendment or following determination by the National Regulator.

1. Definitions

1.1 In this Schedule, a reference to a clause or Appendix unless stated otherwise, is to a clause or Appendix of this Schedule. Words and expressions have the meaning given in Annex A of the Agreement.

"CPS Service" is defined as the facility, provided by *eircom* that permits an *eircom* customer to decide in advance to use the Operator to carry certain pre-defined classes of calls.

"Industry Agreed" is defined as agreed by the CPS Committee and the CPS Single Billing Steering Group established pursuant to Decision Notices D2/99, D13/02 and D20/03 respectively.

2. Description of Service

2.1 Subject to the provisions of this Schedule, *eircom* shall provide Carrier Pre-Selection facilities in accordance with the National Regulator's Decision Notices D2/99, D13/99, D13/02 and D20/03.

3 Terms and Conditions

3.1 The Parties agree to provide CPS capability in their Networks in accordance with the Industry Agreed "Carrier Pre-Selection Network Design Decisions, CPS19", in conjunction with the National Regulator's Decision Notices D2/99, D13/99, D13/02 and D20/03.

3.2 The Parties agree to abide by the Industry Agreed "Carrier Pre-selection Industry Process Definition, CPS18" and the "Carrier Pre-Select IT Functional Specification, CPS16" as amended.

3.3 *eircom* will be bound by the terms of the Carrier Pre Selection Service Level Agreement as published on the eircom Wholesale website. The controlling document is the latest version of the above titled document published on eircom's website as agreed with the National Regulator following negotiation with industry if appropriate.

3.4 The Parties agree to be bound by the conditions of the Code of Practice as published on eircom's website as agreed with the National Regulator following negotiation with industry, if appropriate.

3.5 Each Party shall correct faults which occur in its Systems which affect the delivery of the CPS Service in accordance with such Party's normal work practices. For the avoidance of doubt, neither Party warrants that its Systems is, or will be, free from faults.

3.6 Calling Line Identity for network and presentation purposes shall be made available for all Carrier Pre-Selection Calls presented for delivery in the Operator's Network.

3.7 The document CPS 24 as amended, derived from the national numbering scheme, provides guidelines to which codes, on an individual basis, are included and excluded in the definition of All Calls for the purpose of CPS. For the avoidance of doubt calls to the codes "13X", "17X", "112", "999", "1891" and "199" are to be excluded. Decision D13/02 – called for these exclusions to be reviewed which exercise is in progress.

3.8 *eircom* will not discriminate in the investigation and repair of faults between access lines with CPS activated for the Operator and all other access lines.

4. Routing

4.1 *eircom* will route CPS Calls in accordance with the routing arrangement as set out in Service Schedule 103.

4.2 All calls subject to a CPS mechanism will be routed without alteration to the digit string dialled by the customer subject to the following exceptions required by the National Regulator's Decision Notice D13/99:
- the insertion of the CPS Routing Code Prefix (as defined in D13/99)
- the insertion of the STD Code (as defined in D13/99) for the local call area
- the removal of the customer instruction digits "141" when the calling line category is reset to Calling Line Identification Restriction (CLIR) (as defined in D13/99) and passed through
- the removal of the customer instruction digits "142" when the calling line category is reset Calling Line Identification Presentation (CLIP) (as defined in D13/99) and passed through

5. Charging

5.1 For the conveyance of *eircom* CPS Service calls from the *eircom* Network, the Operator shall pay *eircom* a charge calculated in accordance with the rates as specified in the *eircom* RIO Price List, Service Schedule 103.

5.2 The charges payable to *eircom* for handling CPS orders and CPS Service Enablement Testing are outlined in the *eircom* RIO Price List, Service Schedule 120, *eircom* Carrier Pre-Selection (CPS) Service as published from

time to time. All charges relating to this Service Schedule will be calculated for each calendar month and will be invoiced together with the traffic invoice for that month.

5.3 The CPS Service Enablement testing with the Operator will be charged at a once off rate as outlined in the *eircom* RIO Price List, Service Schedule 120 *eircom* Carrier Pre- Selection (CPS) as published from time to time assuming that testing is successfully completed at the first attempt. Separate charges will be agreed between the Parties if elements of the testing have to be repeated.

ANNEX C

SERVICE SCHEDULE 121

Access to *eircom* 1891 Internet Service

This Service Schedule is effective from the date of signature of this Interconnect Agreement and shall remain in effect until amended following agreement of the Parties to such amendment or following determination by the National Regulator.

1. Definitions

1.1 In this Schedule, a reference to a clause or Appendix unless stated otherwise, is to a clause or Appendix of this Schedule. Words and expressions have the meaning given in Annex A.

2. Description of Service

2.1 Subject to the provisions of this Service Schedule, *eircom* shall convey *eircom* Internet Access Calls originated in and handed over from the Operator Network. This shall comprise traffic commencing with the digits "1891" which have been allocated to the Operator by the National Regulator.

.

3 Terms and Conditions

3.1 The Parties shall agree in advance all necessary technical requirements, including Call set-up and cleardown sequences, for the conveyance of Calls pursuant to this Schedule. This specification is identified in the Network Plan.

3.2 *eircom* shall convey *eircom* Internet Access Calls during those periods of time and at the same standard and quality of service as *eircom* conveys similar Calls originated within the *eircom* Network.

3.3 Each Party shall correct faults which occur in its Network which affect the conveyance of *eircom* Internet Access Calls in accordance with such Party's normal engineering practices. For the avoidance of doubt, neither Party warrants that its Network is, or will be, free from faults.

3.4 Calling Line Identity for network and presentation purposes shall, where available, be made available for all *eircom* Internet Access Calls presented for delivery in the *eircom* Network.

4. Routing

4.1 The conveyance of *eircom* Internet Access Calls shall be in accordance with the routing principles specified in the Network Plan. All Calls covered by this Service Schedule will be carried on *eircom* billed Interconnect Paths.

5. Charging

5.1 For the delivery of *eircom* Internet Access Service traffic originated in the operator Network, the Operator shall pay a charge per minute calculated in accordance with the rates as specified in the *eircom* RIO Price List, Service Schedule 121, Access to eircom Internet Service as published from time to time. Per minute traffic charging at each charge shall be based on chargeable cumulative seconds for each Billing Period rounded to the nearest minute.

ANNEX C

SERVICE SCHEDULE 122

Access to *eircom* 1892 Internet Service

This Service Schedule is effective from the date of signature of this Interconnect Agreement and/or an Amendment thereto and shall remain in effect until amended following agreement of the Parties to such amendment or following determination by the National Regulator or termination of this Agreement.

1. Definitions

1.1 In this Schedule, a reference to a clause or Appendix unless stated otherwise, is to a clause or Appendix of this Schedule. Words and expressions have the meaning given in Annex A.

2. Description of Service

2.1 Subject to the provisions of this Service Schedule, *eircom* shall convey *eircom* Internet Access Calls originated in and handed over from the Operator Network. This shall comprise traffic commencing with the digits "1892" which have been allocated to *eircom* by the National Regulator.

.

3 Terms and Conditions

3.1 The Parties shall agree in advance all necessary technical requirements, including Call set-up and cleardown sequences, for the conveyance of Calls pursuant to this Schedule. This specification is identified in the Network Plan.

3.2 *eircom* shall convey *eircom* Internet Access Calls during those periods of time and at the same standard and quality of service as *eircom* conveys similar Calls originated within the *eircom* Network.

3.3 Each Party shall correct faults which occur in its Network which affect the conveyance of *eircom* Internet Access Calls in accordance with such Party's normal engineering practices. For the avoidance of doubt, neither Party warrants that its Network is, or will be, free from faults.

3.4 Calling Line Identity for network and presentation purposes shall, where available, be made available for all *eircom* Internet Access Calls presented for delivery in the *eircom* Network.

4. Routing

4.1 The conveyance of *eircom* Internet Access Calls shall be in accordance with the routing principles specified in the Network Plan. All Calls covered by this Service Schedule will be carried on *eircom* billed Interconnect Paths.

5. Charging

5.1 For the delivery of *eircom* 1892 Internet Access Service traffic originated in the Operator Network, the Operator shall pay a charge per minute calculated in accordance with the rates as specified in the *eircom* RIO Price List, Service Schedule 122, Access to eircom 1892 Internet Service as published from time to time. Per minute traffic charging at each charge shall be based on chargeable cumulative seconds for each Billing Period rounded to the nearest minute.

ANNEX C

SERVICE SCHEDULE 205

Access to Operator Premium Rate Services

This Service Schedule is effective from the date of signature of this Service Schedule and shall remain in effect until amended following agreement of the Parties to such amendment or following determination by the National Regulator.

1. Definitions

1.1 In this Schedule, a reference to a clause or Appendix unless stated otherwise, is to a clause or Appendix of this Schedule. Words and expressions have the meaning given in Annex A, except as shown below.

Retention Rate: is defined as the appropriate amount of revenue collected for the call that can be retained by eircom as the originating Operator.

Settlement Rate: is defined as the amount that is passed from eircom to the Operator for access to the service, for the origination and conveyance of a call. It is normally the difference between the revenue (usually gross retail revenue) collected minus the Retention Rate.

2. Description of Service

2.1 Subject to the provisions of this Service Schedule, the Operator shall convey the Operator Premium Rate Services Access Calls originated in and handed over from the *eircom* network for delivery to Premium Rate Services provided by the Operator. This shall comprise of all traffic with the leading digits "15XX excluding 1511" which have been allocated to the Operator by the National Regulator.

3 Terms and Conditions

3.1 The Parties shall agree in advance all necessary technical requirements, including Call set-up and cleardown sequences, for the conveyance of Calls pursuant to this Schedule. This specification is identified in the Network Plan.

3.2 The Operator shall convey Operator Premium Rate Services Access Calls during those periods of time and at the same standard and quality of service

as the Operator conveys similar Calls originated within the Operator Network.

3.3 Each Party shall correct faults which occur in its Network which affect the conveyance of Operator Premium Rate Services Access Calls in accordance with such Party's normal engineering practices. For the avoidance of doubt, neither Party warrants that its Network is, or will be, free from faults.

3.4 Calling Line Identity for network and presentation purposes, shall, where available, be made available for all The Operator Premium Rate Access Calls presented for delivery in the Operator Network. In the event that the full Calling Line Identity is not available, the National Destination Code of the caller's number shall be made available instead.

3.5 Requests to open services under this Service Schedule should be made using the "OAO Short Code, Geographic and Non-Geographic number range Activation Request Template" as available in appendix 12 of the Interconnect O&M manual.

4. Routing

4.1 The conveyance of Operator Premium Rate Services Access Calls shall be in accordance with the routing principles as specified in the Network Plan. All calls covered by this Service Schedule will be carried on the Operator billed Interconnect Paths.

5. **Charging**

5.1 For the conveyance of Operator Premium Rate Services Access traffic originated in the *eircom* network by the Operator, *eircom* shall retain the retention charge per call and/or per minute as specified in the *eircom* RIO Price List, Service Schedule 205, Access to Operator Premium Rate Service as published from time to time. Per minute traffic charging at each charge shall be based on chargeable cumulative seconds for each Billing Period rounded to the nearest minute.

5.2 Where the operator has decided to avail of Near End Hand Over, the Operator Premium Rate Service traffic settlement rate as provided in the Operator Price List will be recalculated on a quarterly basis. This recalculation will amend the settlement rates to reflect the actual hand off achieved in the network by the Operator for this service and the actual call holding times which will amend gross revenue and regulated retention by eircom for this service.

5.3 The recalculation will be based on the actual Operator traffic for month 1 and the resulting Settlement Rate will be applied to months 4-6, provided the processes and approvals set out in the Operator Price List and the Switched Transit and Routing Price List are obtained in the timeframes set out therein. In the event that either the National Regulator or Operator fail to comply

with the timeframes, the period to introduce the rate change shall be deferred until the 1st of the month after all approvals have been obtained.

6. Billing and Payment

6.1 Both Parties recognises that the lack of fraud prevention, detection and adjustment measures for Premium Rate Services is a mutual concern and that some industry-wide procedures need to be developed. In the interim, the Operator shall bill and reimburse *eircom* in accordance with the procedures outlined in Annex B.

ANNEX C

SERVICE SCHEDULE 206

Access to the Operator Freefone Service

This Service Schedule is effective from the date of signature of this Interconnect Agreement and shall remain in effect until amended following agreement of the Parties to such amendment or following determination by the National Regulator.

1. Definitions

1.1 In this Schedule, a reference to a clause or Appendix unless stated otherwise, is to a clause or Appendix of this Schedule. Words and expressions have the meaning given in Annex A, except as shown below.

"**PAC Eligible Payphone**"
means payphones for which an operator is authorised to request the application of the payphone category to its line for the purpose of recovering the PAC, listed in the A-number database for PAC ("A-Number Database") in accordance with ComReg's requirements.

"**Payphone Access Charge**"or "**PAC**"
is the additional origination charge the terminating operator has to pay to the originating operator for access to the Freefone Service from PAC Eligible Payphones.

Retention Rate: is defined as the appropriate amount of revenue collected for the call that can be retained by eircom as the originating Operator.

Settlement Rate: is defined as the amount that is passed from eircom to the Operator for access to the service, for the origination and conveyance of a call. It is normally the difference between the revenue (usually gross retail revenue) collected minus the Retention Rate.

2. Description of Service

2.1 Subject to the provisions of this Service Schedule, the Operator shall convey Operator Freefone Service Access Calls originated in and handed over from the *eircom* Network for delivery to Freefone services provided by the Operator. This shall comprise all Operator traffic with the leading digits "180" which have been allocated to the Operator by the National Regulator.

2.2 Subject to the provisions of this Schedule, where the call originates on a

PAC eligible Payphone the PAC shall be provided in accordance with the Payphone Access Charge Inter Operator Process Manual ("PAC IPM"), the Payphone Access Charge Product Description ("PAC Product Description") and the Payphone Access Charge Accounting Principles ("PAC-AP"). The controlling document is the latest version of the above titled documents published on eircom's website as agreed with the National Regulator following negotiation with industry, if appropriate.

3 Terms and Conditions

3.1 The Parties shall agree in advance all necessary technical requirements, including Call set-up and cleardown sequences, for the conveyance of Calls pursuant to this Schedule. This specification is identified in the Network Plan.

3.2 The Operator shall convey Operator Freefone Access Calls during those periods of time and at the same standard and quality of service as the Operator conveys similar Calls originated within the Operator Network.

3.3 Each Party shall correct faults which occur in its Network which affect the conveyance of Operator Freefone Access Calls in accordance with such Party's normal engineering practices. For the avoidance of doubt, neither Party warrants that its Network is, or will be, free from faults.

3.4 Calling Line Identity for network and presentation purposes shall, where available, be made available for all Operator Freefone Access Calls presented for delivery in the Operator Network. In the event that the full Calling Line Identity is not available, the National Destination Code of the caller's number shall be made available instead.

3.5 Requests to open services under this Service Schedule should be made using the "OAO Short Code, Geographic and Non-Geographic number range Activation Request Template" as available in appendix 12 of the Interconnect O&M manual.

3.6 The provision, operation and maintenance relating to PAC shall be as set out in the PAC IPM.

4. Routing

4.1 The conveyance of Operator Freefone Service Access Calls shall be in accordance with the routing principles specified in Appendix 1. All calls covered by this Service Schedule will be carried on Operator billed Interconnect Paths.

5. Charging

5.1 For the delivery of Operator Freefone Service Access calls originated in the *eircom* Network, (other than from PAC Eligible payphones) the Operator shall pay *eircom* an average charge calculated in accordance with the rates as

specified in the *eircom* RIO Price List, Service Schedule 206 Access to Operator Freefone Service as published from time to time. Per minute traffic charging at each charge shall be based on chargeable cumulative seconds for each Billing Period rounded to the nearest minute.

5.2 Where the operator has decided to avail of Near End Hand Over, the Operator Freefone Service traffic Settlement Rate as provided in the Operator Price List will be recalculated on a quarterly basis. This recalculation will amend the settlement rates to reflect the actual hand off achieved in the network by the Operator for this service and the actual call holding times which will amend gross revenue and regulated retention by eircom for this service.

5.3 The recalculation will be based on the actual Operator traffic for month 1 and the resulting Settlement Rate will be applied to months 4-6, provided the processes and approvals set out in the Operator Price List and the Switched Transit and Routing Price List are obtained in the timeframes set out therein. In the event that either the National Regulator or Operator fail to comply with the timeframes, the period to introduce the rate change shall be deferred until the 1st of the month after all approvals have been obtained.

5.4 For the delivery of Operator Freefone Service Access traffic from PAC Eligible Payphones, the Operator shall pay *eircom* an average charge calculated in accordance with the rates as specified in the *eircom* RIO Price List, Service Schedule 206, Access to Operator Freefone Service as published from time to time. Traffic charging at each charge shall be based on chargeable cumulative seconds for each Billing Period rounded to the nearest minute.

5.5 In the event that the Operator requests the payphone category to be applied for the purpose of raising its PAC to lines designated by the National Regulator as a PAC Eligible Payphone lines, the Operator shall pay eircom as specified in the *eircom* RIO Price List, Service Schedule 206, Access to Operator Freefone Service as published from time to time.

ANNEX C

SERVICE SCHEDULE 207

Access to the Operator Shared Cost Timed Service

This Service Schedule is effective from the date of signature of this Interconnect Agreement and shall remain in effect until amended following agreement of the Parties to such amendment or following determination by the National Regulator.

1. Definitions

1.1 In this Schedule, a reference to a clause or Appendix unless stated otherwise, is to a clause or Appendix of this Schedule. Words and expressions have the meaning given in Annex A, except as shown below.

Retention Rate: is defined as the appropriate amount of revenue collected for the call that can be retained by eircom as the originating Operator.

Settlement Rate: is defined as the amount that is passed from eircom to the Operator for access to the service, for the origination and conveyance of a call. It is normally the difference between the revenue (usually gross retail revenue) collected minus the Retention Rate.

2. Description of Service

2.1 Subject to the provisions of this Service Schedule, the Operator shall convey Operator Shared Cost Timed Service Access Calls originated in and handed over from the *eircom* Network for delivery to Shared Cost Timed Service provided by the Operator. This shall comprise all Operator traffic with the leading digits "1890" which have been allocated to the Operator by the National Regulator.

3. Terms and Conditions

3.1 The Parties shall agree in advance all necessary technical requirements, including Call set-up and cleardown sequences, for the conveyance of Calls pursuant to this Schedule. This specification is identified in the Network Plan.

3.2 The Operator shall convey Operator Shared Cost Timed Access Calls during those periods of time and at the same standard and quality of service as the Operator conveys similar Calls originated within the Operator Network.

3.3 Each Party shall correct faults which occur in its Network which affect the conveyance of the Operator Shared Cost Timed Access Calls in accordance with such Party's normal engineering practices. For the avoidance of doubt, neither Party warrants that its Network is, or will be, free from faults.

3.4 Calling Line Identity for network and presentation purposes shall, where available, be made available for all Operator Shared Cost Timed Access Calls presented for delivery in the Operator Network. In the event that the full Calling Line Identity is not available, the National Destination Code of the caller's number shall be made available instead.

3.5 Requests to open services under this Service Schedule should be made using the "OAO Short Code, Geographic and Non-Geographic number range Activation Request Template" as available in appendix 12 of the Interconnect O&M manual.

4. Routing

4.1 The conveyance of Operator Shared Cost Timed Service Access Calls shall be in accordance with the routing principles specified in The Network Plan. All calls covered by this Service Schedule will be carried on Operator billed Interconnect Paths.

5. Charging

5.1 For the delivery of Operator Shared Cost Timed Service Access traffic originated in the *eircom* network, *eircom* shall retain the average retention charge per minute and per call calculated in accordance with the rates as specified in the *eircom* RIO Price List, Service Schedule 207 Access to Operator Shared Cost Timed Service as published from time to time.

5.2 Where the operator has decided to avail of Near End Hand Over, the Operator Shared Cost Timed Service traffic settlement rate as provided in the Operator Price List will be recalculated on a quarterly basis. This recalculation will amend the settlement rates to reflect the actual hand off achieved in the network by the Operator for this service and the actual call holding times which will amend gross revenue and regulated retention by eircom for this service.

5.3 The recalculation will be based on the actual Operator traffic for month 1 and the resulting Settlement Rate will be applied to months 4-6, provided the processes and approvals set out in the Operator Price List and the Switched Transit and Routing Price List are obtained in the timeframes set out therein. In the event that either the National Regulator or Operator fail to comply with the timeframes, the period to introduce the rate change shall be deferred until the 1st of the month after all approvals have been obtained.

ANNEX C

SERVICE SCHEDULE 208

Access to the Operator Shared Cost Fixed Service

This Service Schedule is effective from the date of signature of this Interconnect Agreement and shall remain in effect until amended following agreement of the Parties to such amendment or following determination by the National Regulator.

1. Definitions

1.1 In this Schedule, a reference to a clause or Appendix unless stated otherwise, is to a clause or Appendix of this Schedule. Words and expressions have the meaning given in Annex A except as shown below.

Retention Rate: is defined as the appropriate amount of revenue collected for the call that can be retained by eircom as the originating Operator.

Settlement Rate: is defined as the amount that is passed from eircom to the Operator for access to the service, for the origination and conveyance of a call. It is normally the difference between the revenue (usually gross retail revenue) collected minus the Retention Rate.

2. Description of Service

2.1 Subject to the provisions of this Service Schedule, the Operator shall convey Operator Shared Cost Fixed Service Access Calls originated in and handed over from the *eircom* Network for delivery to Shared Cost Fixed Service provided by the Operator. This shall comprise all Operator traffic with the leading digits "1850" which have been allocated to the Operator by the National Regulator.

3 Terms and Conditions

3.1 The Parties shall agree in advance all necessary technical requirements, including Call set-up and cleardown sequences, for the conveyance of Calls pursuant to this Schedule. This specification is identified in the Network Plan.

3.2 The Operator shall convey Operator Shared Cost Fixed Access Calls during those periods of time and at the same standard and quality of service as the Operator conveys similar Calls originated within the Operator Network.

3.3 Each Party shall correct faults which occur in its Network which affect the conveyance of Operator Shared Cost Fixed Access Calls in accordance with such Party's normal engineering practices. For the avoidance of doubt, neither Party warrants that its Network is, or will be, free from faults.

3.4 Calling Line Identity for network and presentation purposes shall, where available, be made available for all Operator Shared Cost Fixed Access Calls presented for delivery in the Operator Network. In the event that the full Calling Line Identity is not available, the National Destination Code of the caller's number shall be made available instead.

3.5 Requests to open services under this Service Schedule should be made using the "OAO Short Code, Geographic and Non-Geographic number range Activation Request Template" as available in appendix 12 of the Interconnect O&M manual.

4. Routing

4.1 The conveyance of Operator Shared Cost Fixed Service Access Calls shall be in accordance with the routing principles specified in The Network Plan. All calls covered by this Service Schedule will be carried on Operator billed Interconnect Paths.

5. Charging

5.1 For the delivery of Operator Shared Cost Fixed Service Access traffic originated in the *eircom* Network, *eircom* shall retain an average retention charge per call and per minute calculated in accordance with the rates as specified in the *eircom* RIO Price List, Service Schedule 208, Access to Operator Shared Cost Fixed Service as published from time to time,

5.2 Where the operator has decided to avail of Near End Hand Over, the Operator Shared Cost Fixed Service traffic settlement rate as provided in the Operator Price List will be recalculated on a quarterly basis. This recalculation will amend the settlement rates to reflect the actual hand off achieved in the network by the Operator for this service and the actual call holding times which will amend gross revenue and regulated retention by eircom for this service.

5.3 The recalculation will be based on the actual Operator traffic for month 1 and the resulting settlement rate will be applied to months 4-6, provided the processes and approvals set out in the Operator Price List and the Switched Transit and Routing Price List are obtained in the timeframes set out therein. In the event that either the National Regulator or Operator fail to comply with the timeframes, the period to introduce the rate change shall be deferred until the 1st of the month after all approvals have been obtained.

ANNEX C

SERVICE SCHEDULE 209

Operator Universal Access Service

This Service Schedule is effective from the date of signature of this Interconnect Agreement and shall remain in effect until amended following agreement of the Parties to such amendment or following determination by the National Regulator.

1. Definitions

1.1 In this Schedule, a reference to a clause or Appendix unless stated otherwise, is to a clause or Appendix of this Schedule. Words and expressions have the meaning given in Annex A.

Retention Rate: is defined as the appropriate amount of revenue collected for the call that can be retained by eircom as the originating Operator.

Settlement Rate: is defined as the amount that is passed from eircom to the Operator for access to the service, for the origination and conveyance of a call. It is normally the difference between the revenue (usually gross retail revenue) collected minus the Retention Rate.

2. Description of Service

2.1 Subject to the provisions of this Service Schedule, the Operator shall convey Operator Universal Access Service Calls originated in and handed over from the *eircom* Network for delivery to Universal Access Services provided by the Operator. This shall comprise all traffic with the digits "0818" which have been allocated to the Operator by the National Regulator.

3 Terms and Conditions

3.1 The Parties shall agree in advance all necessary technical requirements, including Call set-up and cleardown sequences, for the conveyance of Calls pursuant to this Schedule. This specification is identified in the Network Plan.

3.2 The Operator shall convey Operator Universal Access Service Calls during those periods of time and at the same standard and quality of service as Operator conveys similar Calls originated within the Operator Network.

3.3 Each Party shall correct faults which occur in its Network which affect the conveyance of Operator Universal Access Service Calls in accordance with such Party's normal engineering practices. For the avoidance of doubt, neither Party warrants that its Network is, or will be, free from faults.

3.4 Calling Line Identity for network and presentation purposes shall, where available, be made available for all Operator Universal Access Service Calls presented for delivery in the Operator Network

3.5 Requests to open services under this Service Schedule should be made using the "OAO Short Code, Geographic and Non-Geographic number range Activation Request Template" as available in appendix 12 of the Interconnect O&M manual.

4. Routing

4.1 The conveyance of Operator Universal Access Service Calls shall be in accordance with the routing principles specified in the Network Plan. All calls covered by this Service Schedule will be carried on Operator billed Interconnect Paths.

5. Charging

5.1 For the delivery of Operator Universal Service Access traffic originated in the *eircom* Network, *eircom* shall retain an average retention charge per minute and per call calculated in accordance with the rates as specified in the *eircom* RIO Price List, Service Schedule 209, Operator Universal Access Service as published from time to time.

5.2 Where the operator has decided to avail of Near End Hand Over, the Operator Universal Service traffic settlement rate as provided in the Operator Price List will be recalculated on a quarterly basis. This recalculation will amend the settlement rates to reflect the actual hand off achieved in the network by the Operator for this service and the actual call holding times which will amend gross revenue and regulated retention by eircom for this service.

5.3 The recalculation will be based on the actual Operator traffic for month 1 and the resulting settlement rate will be applied to months 4-6, provided the processes and approvals set out in the Operator Price List and the Switched Transit and Routing Price List are obtained in the timeframes set out therein. In the event that either the National Regulator or Operator fail to comply with the timeframes, the period to introduce the rate change shall be deferred until the 1st of the month after all approvals have been obtained.

ANNEX C

SERVICE SCHEDULE 210

Operator Personal Numbering Service

This Service Schedule is effective from the date of signature of this Interconnect Agreement and shall remain in effect until amended following agreement of the Parties to such amendment or following determination by the National Regulator.

1. Definitions

1.1 In this Schedule, a reference to a clause or Appendix unless stated otherwise, is to a clause or Appendix of this Schedule. Words and expressions have the meaning given in Annex A.

Retention Rate: is defined as the appropriate amount of revenue collected for the call that can be retained by eircom as the originating Operator.

Settlement Rate: is defined as the amount that is passed from eircom to the Operator for access to the service, for the origination and conveyance of a call. It is normally the difference between the revenue (usually gross retail revenue) collected minus the Retention Rate.

2. Description of Service

2.1 Subject to the provisions of this Service Schedule, The Operator shall convey Operator Personal Numbering Calls originated in and handed over from the *eircom* Network for delivery to Personal Numbering Services provided by the Operator. This shall comprise all traffic with the digits "0700" which have been allocated to the Operator by the National Regulator.

3 Terms and Conditions

3.1 The Parties shall agree in advance all necessary technical requirements, including Call set-up and cleardown sequences, for the conveyance of Calls pursuant to this Schedule. This specification is identified in the Network Plan.

3.2 The Operator shall convey Operator Personal Numbering Calls during those periods of time and at the same standard and quality of service as Operator conveys similar Calls originated within the Operator Network.

3.3 Each Party shall correct faults which occur in its Network which affect the conveyance of Operator Personal Numbering Calls in accordance with such

Party's normal engineering practices. For the avoidance of doubt, neither Party warrants that its Network is, or will be, free from faults.

3.4 Calling Line Identity for network and presentation purposes shall, where available, be made available for all Operator Personal Numbering Calls presented for delivery in the Operator Network.

3.5 Requests to open services under this Service Schedule should be made using the "OAO Short Code, Geographic and Non-Geographic number range Activation Request Template" as available in appendix 12 of the Interconnect O&M manual.

4. Routing

4.1 The conveyance of Operator Personal Numbering Calls shall be in accordance with the routing principles specified in the Network Plan. All calls covered by this Service Schedule will be carried on Operator billed Interconnect Paths.

5. Charging

5.1 For the delivery of Personal Numbering Service Access traffic originated in the *eircom* Network, *eircom* shall retain an average retention charge per minute and per call calculated in accordance with the rates as specified in the *eircom* RIO Price List, Service Schedule 210 Operator Personal Numbering Service as published from time to time.

5.2 Where the operator has decided to avail of Near End Hand Over, the Operator Personal Numbering Service traffic settlement rate as provided in the Operator Price List will be recalculated on a quarterly basis. This recalculation will amend the settlement rates to reflect the actual hand off achieved in the network by the Operator for this service and the actual call holding times which will amend gross revenue and regulated retention by eircom for this service.

5.3 The recalculation will be based on the actual Operator traffic for month 1 and the resulting settlement rate will be applied to months 4-6, provided the processes and approvals set out in the Operator Price List and the Switched Transit and Routing Price List are obtained in the timeframes set out therein. In the event that either the National Regulator or Operator fail to comply with the timeframes, the period to introduce the rate change shall be deferred until the 1st of the month after all approvals have been obtained.

.

ANNEX C

SERVICE SCHEDULE 221

Access to Operator 1891 Internet Service

This Service Schedule is effective from the date of signature of this Interconnect Agreement and shall remain in effect until amended following agreement of the Parties to such amendment or following determination by the National Regulator.

1. Definitions

1.1 In this Schedule, a reference to a clause or Appendix unless stated otherwise, is to a clause or Appendix of this Schedule. Words and expressions have the meaning given in Annex A.

Retention Rate: is defined as the appropriate amount of revenue collected for the call that can be retained by eircom as the originating Operator.

Settlement Rate: is defined as the amount that is passed from eircom to the Operator for access to the service, for the origination and conveyance of a call. It is normally the difference between the revenue (usually gross retail revenue) collected minus the Retention Rate.

2. Description of Service

2.1 Subject to the provisions of this Service Schedule, the Operator shall convey Operator Internet Access Calls originated in and handed over from the *eircom* Network. This shall comprise traffic commencing with the digits "1891".

3 Terms and Conditions

3.1 The Parties shall agree in advance all necessary technical requirements, including Call set-up and cleardown sequences, for the conveyance of Calls pursuant to this Schedule. This specification is identified in the Network Plan.

3.2 The Operator shall convey Operator Internet Access Calls during those periods of time and at the same standard and quality of service as Operator conveys similar Calls originated within the Operator Network.

3.3 Each Party shall correct faults which occur in its Network which affect the conveyance of Operator Internet Access Calls in accordance with such Party's normal engineering practices. For the avoidance of doubt, neither Party warrants that its Network is, or will be, free from faults.

3.4 Calling Line Identity for network and presentation purposes shall, where available, be made available for all Operator Internet Access Calls presented for delivery in the Operator Network.

3.5 Requests to open services under this Service Schedule should be made using the "OAO Short Code, Geographic and Non-Geographic number range Activation Request Template" as available in appendix 12 of the Interconnect O&M manual

4. Routing

4.1 The conveyance of Operator Internet Access Calls shall be in accordance with the routing principles specified in the Network Plan. All Calls covered by this Service Schedule will be carried on Operator billed Interconnect Paths.

5. Charging

5.1 For the delivery of Operator Internet Access Service traffic originated in the *eircom* Network, *eircom* shall retain a retention charge per minute and per call calculated in accordance with the rates as specified in the *eircom* RIO Price List, Service Schedule 221, Operator Internet Access Service as published from time to time. Traffic charging at each charge shall be based on chargeable cumulative seconds for each Billing Period rounded to the nearest minute.

5.2 Where the operator has decided to avail of Near End Hand Over, the Operator 1891 Internet Access Service traffic settlement rate as provided in the Operator Price List will be recalculated on a quarterly basis. This recalculation will amend the settlement rates to reflect the actual hand off achieved in the network by the Operator for this service and the actual call holding times which will amend gross revenue and regulated retention by eircom for this service.

5.3 The recalculation will be based on the actual Operator traffic for month 1 and the resulting settlement rate will be applied to months 4-6, provided the processes and approvals set out in the Operator Price List and the Switched Transit and Routing Price List are obtained in the timeframes set out therein. In the event that either the National Regulator or Operator fail to comply with the timeframes, the period to introduce the rate change shall be deferred until the 1st of the month after all approvals have been obtained.

ANNEX C

SERVICE SCHEDULE 222

Access to Operator 1892 Internet Service

This Service Schedule is effective from the date of signature of this Interconnect Agreement and/or an Amendment thereto and shall remain in effect until amended following agreement of the Parties to such amendment or following determination by the National Regulator or termination of this Agreement.

1. Definitions

1.1 In this Schedule, a reference to a clause or Appendix unless stated otherwise, is to a clause or Appendix of this Schedule. Words and expressions have the meaning given in Annex A.

Retention Rate: is defined as the appropriate amount of revenue collected for the call that can be retained by eircom as the originating Operator.

Settlement Rate: is defined as the amount that is passed from eircom to the Operator for access to the service, for the origination and conveyance of a call. It is normally the difference between the revenue (usually gross retail revenue) collected minus the Retention Rate.

2. Description of Service

2.1 Subject to the provisions of this Service Schedule, the Operator shall convey Operator Internet Access Calls originated in and handed over from the *eircom* Network. This shall comprise traffic commencing with the digits "1892".

3 Terms and Conditions

3.1 The Parties shall agree in advance all necessary technical requirements, including Call set-up and cleardown sequences, for the conveyance of Calls pursuant to this Schedule. This specification is identified in the Network Plan.

3.2 The Operator shall convey Operator Internet Access Calls during those periods of time and at the same standard and quality of service as Operator conveys similar Calls originated within the Operator Network.

3.3 Each Party shall correct faults which occur in its Network which affect the conveyance of Operator Internet Access Calls in accordance with such Party's normal engineering practices. For the avoidance of doubt, neither Party warrants that its Network is, or will be, free from faults.

3.4 Calling Line Identity for network and presentation purposes shall, where available, be made available for all Operator Internet Access Calls presented for delivery in the Operator Network.

3.5 Requests to open services under this Service Schedule should be made using the "OAO Short Code, Geographic and Non-Geographic number range Activation Request Template" as available in appendix 12 of the Interconnect O&M manual.

4. Routing

4.1 The conveyance of Operator Internet Access Calls shall be in accordance with the routing principles specified in the Network Plan. All Calls covered by this Service Schedule will be carried on Operator billed Interconnect Paths.

5. Charging

5.1 For the delivery of Operator Internet Access Service traffic originated in the *eircom* Network, *eircom* shall retain a retention charge per minute and per call calculated in accordance with the rates as specified in the *eircom* RIO Price List, Service Schedule 222, Operator 1892 Internet Access Service as published from time to time. Traffic charging at each charge shall be based on chargeable cumulative seconds for each Billing Period rounded to the nearest minute.

5.2 Where the operator has decided to avail of Near End Hand Over, the Operator 1892 Internet Access Service traffic settlement rate as provided in the Operator Price List will be recalculated on a quarterly basis. This recalculation will amend the settlement rates to reflect the actual hand off achieved in the network by the Operator for this service and the actual call holding times which will amend gross revenue and regulated retention by eircom for this service.

5.3 The recalculation will be based on the actual Operator traffic for month 1 and the resulting Settlement Rate will be applied to months 4-6, provided the processes and approvals set out in the Operator Price List and the Switched Transit and Routing Price List are obtained in the timeframes set out therein. In the event that either the National Regulator or Operator fail to comply with the timeframes, the period to introduce the rate change shall be deferred until the 1st of the month after all approvals have been obtained.

ANNEX C

SERVICE SCHEDULE 223

Operator 1893 Primary
Flat Rate Internet Access Call Origination Service

This Service Schedule is effective from the date of signature of this Interconnect Agreement and/or an Amendment thereto and shall remain in effect until amended following agreement of the Parties to such amendment or following determination by the National Regulator or termination of this Agreement.

1. Definitions

1.1 In this Schedule, a reference to a clause or Appendix unless stated otherwise, is to a clause or Appendix of this Schedule. Words and expressions have the meaning given in Annex A or defined elsewhere in this Agreement.

"Primary FRIACO" means flat rate internet access call origination as defined in the FRIACO Product Description as published on the eircom website as agreed with the National Regulator following negotiation with the Industry if appropriate.

"FRIACO Interconnect Path" means the 2Mbit/s interconnect path dedicated for access to Operator's 1893 FRIACO service(s) as provided for herein and Service Schedule 001.

"FRIACO Calls" means calls to Operators 1893 Primary FRIACO service(s) carried on Operator's FRIACO Interconnect Paths.

2. Description of Service

2.1 Subject to the provisions of this Service Schedule, the Operator 1893 Primary FRIACO Service shall convey FRIACO Calls originated in the eircom Network. This shall comprise traffic commencing with the digits "1893". The product will also be provided as described in the current Flat Rate Internet Access Call Origination Product Description ("FRIACO Product Description") published on the *eircom* website as agreed with the National Regulator following negotiation with the Industry if appropriate. The FRIACO Product Description may be updated and republished as agreed with the National Regulator following negotiations with industry if appropriate.

3 Terms and Conditions

3.1 The Parties shall agree in advance all necessary technical requirements, including Call set up and cleardown sequences, for the conveyance of Calls

pursuant to this Schedule. This specification is identified in the Network Plan.

3.2 The Operator shall convey Operator FRIACO Calls during those periods of time and at the same standard and quality of service as Operator conveys similar Calls originated within the Operator Network.

3.3 Each Party shall correct faults, which occur in its Network, which affect the conveyance of Operator FRIACO Calls in accordance with such Party's normal engineering practices. For the avoidance of doubt, neither Party warrants that its Network is, or will be, free from faults.

3.4 Calling Line Identity for network and presentation purposes shall, where available, be made available for all Operator FRIACO Calls presented for delivery in the Operator Network.

3.5 Requests to open services under this Service Schedule should be made using the "OAO Short Code, Geographic and Non-Geographic number range Activation Request Template" as available in appendix 12 of the Interconnect O&M manual.

3.6 National Transit shall not be provided for access to Operator 1893 Primary FRIACO Service.

3.7 The Parties shall make reasonable endeavours to agree adequate safeguards to prevent and detect fraudulent use of Operator 1893 Primary FRIACO Service.

3.8 *eircom* reserves the right to block or clear-down Calls conveyed under this Service Schedule if it reasonably considers that use of the Operator 1893 Primary FRIACO Service is causing or has the potential to cause severe degradation of service to customers or impacts *eircom's* ability to fulfil its Universal Service Obligations. *eircom's* actions must be reasonable and in accordance with Clause 12 of the main body of this Interconnect Agreement.

3.9 If the volume of FRIACO call attempts reaches a level which threatens to jeopardise either party's network integrity, *eircom* and/or Operator may apply the necessary network management controls to prevent the adverse network implications. In the event that a Party takes such action it shall promptly notify the other Party and the Parties will act reasonably to attempt to address and resolve the issue. The Parties actions must be reasonable and in accordance with Clause 12 of the main body of this Interconnect Agreement.

3.10 If *eircom* identifies an area of Network constraint that is causing or is likely to cause capacity issues requiring the regular, ongoing or frequent need to apply network management controls, *eircom* shall immediately escalate to the National Regulator and notify the Operator.

3.11 Only FRIACO Calls may be conveyed pursuant to this Service Schedule and on the FRIACO Interconnect Path.

3.12 The Operator shall operate the FRIACO service(s) in a reasonable manner.

4. Routing

4.1 The conveyance of Operator FRIACO Calls shall be in accordance with the routing principles specified in the Network Plan. All Calls covered by this Service Schedule will be carried on Operator FRIACO Interconnect Paths. For the avoidance of doubt, overflow routing will not be provided for Operator FRIACO Calls.

5. Charging

5.1 For the delivery of Operator FRIACO Calls originated in the *eircom* Network, Operator shall pay *eircom* the charges as set out in the *eircom* RIO Price List.

ANNEX C

SERVICE SCHEDULE 301

Reciprocal Non-Geographic Number Portability Service

This Service Schedule is effective from the date of signature of this Interconnect Agreement and shall remain in effect until amended following agreement of the Parties to such amendment or following determination by the National Regulator.

1. Definitions

1.1 In this Schedule, a reference to a clause unless stated otherwise, is to a clause of this Schedule. Words and expressions have the meaning given in Annex A of the Agreement.

"Block Holder" is defined as the Operator to whom the number range has been allocated by the National Regulator.

"Donor Operator" is defined as the Operator in whose Network the ported number had been before the Port has taken place.

"Recipient" is defined as the Operator in whose Network the ported number is after the Port has taken place.

"NTC Services" are defined as freephone, premium rate, shared cost, universal access and personal numbering services, with the inclusion of additional and future non-geographic services as determined by the National Regulator.

"Non-Geographic Number Portability (NGNP)" is defined as the service by which a customer can move their NTC Service from one Network to another without the requirement to change the associated non-geographic number .

"NTC Number" is defined as a non-geographic number which supports an NTC service

"Port(ing)" is defined as the process of transferring the NTC number from one Network to another

"Interim Charges" are defined as the transaction charges for the provision of NGNP Services included in this Agreement, purely for the purposes of billing

arrangements in the interim period, and which will be replaced by charges approved by the National Regulator. These approved charges will be applied retrospectively to the commencement of Non Geographic Number Portability services.

"Industry Agreed" is defined as agreed by the Number Portability Committee established pursuant to the National Regulator's Decision Notice D1/99.

2. Description of Service

2.1 Subject to the provisions of this Schedule, the Parties shall co-operate to operate Non-Geographic Number Portability between their respective Networks, in accordance with the National Regulator's Decision Notice D1/99.

3 Terms and Conditions

3.1 The Parties agree to provide NGNP capability within their Networks in accordance with the Industry Agreed "Number Portability Network Working Group Design Decisions, NP14".

3.2 The Parties agree to abide by the Industry Agreed "Non-Geographic Number Portability End To End Process Manual, NP16", and with the Industry Agreed "Non Geographic Number Portability IT Functional Specification, NP31", and the Industry Agreed "NGNP Test Specification for Service Enablement, NP 28".

3.3 The Parties agree to make reasonable endeavours to abide by the conditions of the Industry Agreed "Non Geographic Number Portability Code of Practice NP15".

3.4 The Parties agree to abide by the terms of the Reciprocal Non Geographic Number Portability Service Level Agreement as published on the eircom Wholesale website. The controlling document is the latest version of the above titled document published on eircom's website as agreed with the National Regulator following negotiations with industry if appropriate.

3.5 Each Party shall correct faults which occur in its Systems which affect the Non-Geographic Number Portability service in accordance with such Party's normal work practices. For the avoidance of doubt, neither Party warrants that its Systems is, or will be, free from faults.

3.6 The Recipient shall be responsible for ensuring that the necessary data build is completed and tested in its Network before the scheduled Porting time.

4. Routing

4.1 The correct routing of traffic resulting from NGNP shall be achieved through the use of the routing prefixes as allocated by the National Regulator and as outlined in the Industry Agreed "Number Portability Network Working Group Design Decisions, NP14". The current allocated codes are provided in table 1 below.

Table 1

Operator		**Final Code**
Operator		
eircom		1751005

4.2 The Parties agree that the Calls handed over from each other to ported NTC Numbers shall be conveyed and charged in accordance with the Service Schedules appropriate to that NTC Service type. The status of these Service Schedules shall not be altered by the agreement of this Amendment.

5. Charging

5.1 The interim transaction charge payable to *eircom* for the provision of NGNP services are as outlined in Table 2 as specified in the *eircom* RIO Price List, Service Schedule 301, Reciprocal Non- Geographic Number Portability Service as published from time to time. In addition where the porting is scheduled outside the Working Day, the additional charges as specified in Table 3 as specified in the *eircom* RIO Price List, Service Schedule 301, Reciprocal Non- Geographic Number Portability Service as published from time to time shall apply. All charges relating to clause 5.1 and clause 5.2 will be calculated for each calendar month and will be invoiced together with the traffic invoice for the particular month.

5.2 The interim transaction charge payable to the Operator for the provision of NGNP services are as outlined in Table 4 as specified in the *eircom* RIO Price List, Service Schedule 301, Reciprocal Non- Geographic Number Portability Service as published from time to time. In addition where the porting is scheduled outside the Working Day, the additional charges as specified in Table 5 as specified in the *eircom* RIO Price List, Service Schedule 301, Reciprocal Non- Geographic Number Portability Service as published from time to time shall apply.

5.3 The Charges in Tables 2, 3, 4 and 5 have yet to be approved by the National Regulator, and are therefore agreed as interim charges. Any amendment to the charges in Tables 2, 3, 4 and 5, as a result of approval by the National Regulator shall be applied retrospectively to the commencement of NGNP Services.

5.4 For the conveyance of calls handed over from each other to ported NTC Numbers the Parties shall pay charges in accordance with the Service Schedules of the Agreement appropriate to that NTC Service type.

ANNEX C

SERVICE SCHEDULE 302

Data Management Amendment

This Service Schedule is effective from the date of signature of this Interconnect Agreement and shall remain in effect until amended following agreement of the Parties to such amendment or following determination by the National Regulator.

1. Definitions

1.1 In this Schedule, a reference to a clause or Appendix unless stated otherwise, is to a clause or Appendix of this Schedule. Words and expressions have the meaning given in Annex A.

2. Description of Service

2.1 Subject to the provisions of this Service Schedule, the Requested Party shall implement agreed Data Management Amendments within its Network with 3 weeks of agreement. The Requested Party shall notify the Requesting Party on completion.

3. Charging

The charges for implementation of a Data Management Amendment are outlined in Table 1 as specified in the *eircom* RIO Price List, Service Schedule 302, Data Management Amendment as published from time to time. In the event that a party should request implementation of more than one amendment at the same time, a 50% discount on the administration charge should apply for all requests after the first. In addition a 50% discount to the charge per interconnect node shall apply to all nodes amended in the first or subsequent amendments.

ANNEX C

SERVICE SCHEDULE 303

Reciprocal Geographic Number Portability Service

This Service Schedule is effective from the date of signature of this Interconnect Agreement and shall remain in effect until amended following agreement of the Parties to such amendment or following determination by the National Regulator.

1. Definitions

1.1 In this Schedule, a reference to a clause or Appendix unless stated otherwise, is to a clause or Appendix of this Schedule. Words and expressions have the meaning given in Annex A of the Agreement.

"Block Holder" is defined as the Operator to whom the number range has been allocated by the National Regulator.

"Donor Operator" is defined as the Operator in whose Network the ported number had been before the Port has taken place.

"Recipient" is defined as the Operator in whose Network the ported number is after the Port has taken place.

"Geographic Number Portability (GNP)" is defined as the service by which a customer can move their geographic number from one Network to another without significant service interruption.

"Port(ing)" is defined as the process of transferring the geographic number from one Network to another.

"Industry Agreed" is defined as agreed by the Number Portability Committee established pursuant to the National Regulator's Decision Notice D1/99 or its successor.

2. Description of Service

2.3 The Parties shall co-operate to operate Geographic Number Portability between their respective Networks, in accordance with the National

Regulator's Decision Notice D1/99 or its successor and subject to the provisions of this Schedule.

Terms and Conditions

3.1 The Parties agree to provide GNP capability within their Networks in accordance with the Industry Agreed "Number Portability Network Working Group Design Decisions, NP14".

3.2 The Parties agree to abide by the Industry Agreed but non-contractually binding "Geographic Number Portability Process Manual. This document is a working manual and is subject to review.

3.3 The Parties agree to make reasonable endeavours to abide by the conditions of the Industry Agreed "Number Portability Code of Practice NP15".

3.4 The Donor shall be responsible for ensuring that the routing prefixes are applied and that the necessary data build is completed and tested in its Network before the scheduled porting time.

3.5 The Recipient shall be responsible for ensuring that the necessary data build is completed and tested in its Network before the scheduled Porting time.

4. Routing

4.1 The correct routing of traffic resulting from GNP shall be achieved through the use of the routing prefixes as allocated by the National Regulator and as outlined in the Industry Agreed "Number Portability Network Working Group Design Decisions, NP14". The current allocated codes are provided in table 1 below.

Table 1

Operator	**Final Code**
Operator	
eircom	1752500 – 1752599

4.2 The Parties agree that the Calls handed over from each other to ported geographic numbers shall be conveyed and charged in accordance with the Service Schedule appropriate to that Service type. The status of this Service Schedule shall not be altered by the agreement of this Amendment.

5. Charging

5.1 The charges payable to *eircom* or the Operator, when acting as Donor, for the provision of GNP services during the normal Working Day are as outlined in Table 2 as specified in the *eircom* RIO Price List, Service Schedule 303, Reciprocal Geographic Number Portability as published from time to time. In addition where the Porting is scheduled outside the Working Day, the charges as specified in Table 3 as specified in the *eircom* RIO Price List, Service Schedule 303, Reciprocal Geographic Number Portability as published from time to time shall apply. All charges relating to clause 5.1 and clause 5.2 will be calculated for each calendar month and will be invoiced together with the traffic invoice for the particular month.

5.2 The charge payable to *eircom* or the Operator for the provision of Emergency Restoration will be calculated on the basis of an hourly rate to recover the full costs associated with each instance where the service is required. This charge is specified in Table 4 in the *eircom* RIO Price List, Service Schedule 303, Reciprocal Geographic Number Portability as published from time to time.

ANNEX C

SERVICE SCHEDULE 401

Single Billing through Wholesale Line Rental

This Service Schedule is effective from the date of signature of this Interconnect Agreement and/or an Amendment thereto and shall remain in effect until amended following agreement of the Parties to such amendment or following determination by the National Regulator or termination of this Agreement.

1. Definitions

1.2 In this Schedule, a reference to a clause or Appendix unless stated otherwise, is to a clause or Appendix of this Schedule. Words and expressions have the meaning given in Annex A of the Agreement.

"Customer Listing" means the customer listing setting out the customer's name, address, telephone number, directory status, and direct marketing preference on eCDD and where appropriate the NDD.

"Data Protection Legislation" means the Data Protection Act, 1988, the Data Protection (Amendment) Act, 2003 or any amendment or replacement thereof.

"eircom Customer Directory Database" Or "eCDD" means eircom's internal customer directory database containing the customer listing information for eircom retail customers, which will also include SB-WLR Customer Listing(s) for Operator's SB-WLR Customer(s).

"National Directory Database or NDD" means the record of all subscribers of publicly available telephone services in the State, including those with fixed, personal and mobile numbers, who have not refused to be included in that record, kept in accordance with Regulation 4(3) of the Universal Service Regulations and these Regulations.

"Single Billing through Wholesale Line Rental or SB-WLR" is the facility through which an Operator may provide in conjunction with CPS All Calls (as defined in the

	document CPS 24) a single bill covering all aspects of Voice Services to its customers at rates it determines. The CPSO can provide their own Ancillary Services or may purchase Ancillary Services from *eircom* Wholesale
"SB-WLR Customer"	means a customer who has an active single billing arrangement with the Operator.
"Voice Services":	means the voice services as set out in 2.1.1 of the Single Billing through Wholesale Line Rental Product Description.

2. Description of Service

2.1 Subject to the provisions of this Schedule, *eircom* shall provide Single Billing through Wholesale Line Rental facilities in accordance with the Single Billing through Wholesale Line Rental Product Description ("SB-WLR Product Description") and Single Billing through Wholesale Line Rental Inter Operator Process Manual ("SB-WLR IPM"). The controlling document is the latest version of the above titled document(s) published on *eircom*'s website as agreed with the National Regulator following negotiation with industry, if appropriate.

2.2 SB-WLR is only available in conjunction with the CPS 'all calls' option. A full description of the product is set out in the SB-WLR Product Description.

2.3 Wholesale Line Rental shall only be available to Voice Services.

Terms and Conditions

3.1 Both Parties agree to abide by:

a. SB-WLR IPM; and

b. Billing information exchange specification

c. Order handling gateway data contract

All references are to the latest version published on *eircom*'s website as agreed with the National Regulator following negotiation with industry, if appropriate.

3.2 Both parties agree to be bound by the Single Billing Code of Practice, which may be updated from time to time. The controlling document is the latest version of the above titled document(s) published on *eircom*'s website as agreed with the National Regulator following negotiation with industry, if appropriate.

3.3 A condition precedent to the provision of SB-WLR in respect of any line is that the line has the CPS All Calls option in place with the Operator. However, it is possible for an Operator to request the provision of CPS ALL Calls on the line simultaneously to the provision of WLR.

3.4 Each Party shall correct faults, which occur in its Systems which affect the delivery of the SB-WLR in accordance with such Party's normal work practices. For the avoidance of doubt, neither Party warrants that its Systems is, or will be, free from faults.

3.5 Access to *eircom*'s Ancillary Services may be provided in accordance with the SB-WLR Product Description and SB-WLR IPM. For the avoidance of doubt the Operator must elect in the order whether it wishes *eircom* to provide all or any of the existing Ancillary Services in respect of the telephone line.

3.6 The Operator may ask eircom to divide a multi-line account so that SB-WLR can be applied on only a portion of the original account.

3.7 *eircom* shall continue to bill end customers directly for SB-WLR Product exclusions as set out in the SB-WLR Product Description.

3.8 *eircom* will not discriminate in the investigation and repair of faults between access lines with SB-WLR activated for the Operator and all other access lines.

3.9 The Operator shall be responsible for credit management of customers in relation to SB-WLR. The Parties agree to follow the SB-WLR IPM.

3.10 Ordering, provisioning, and fault reporting and management shall be as set out in the SB-WLR IPM. Customer movement among CPSOs and customer movement in relation to customer premises shall be as set out in the SB-WLR IPM.

3.11 *eircom* shall provide the Operator with billing and call information in respect of calls excluded from CPS "All Calls" and relevant Ancillary Services only in accordance with the SB-WLR Product Description and SB-WLR IPM. The provision of billing information shall align with *eircom* invoice cycles.

3.12 Subject to the condition set out in Clause 3.3 *eircom* shall bar access to all carrier selection and carrier access codes on lines that have SB-WLR applied.

3.13 When SB-WLR is applied to a customer account *eircom*'s obligation to provide SB-WLR Customer Listing information to the National Directory Data Base shall terminate and such obligations shall transfer to the Operator. However eircom shall provide the Facility, as set out in Clause 4 herein, to ensure the continuation of this information supply on behalf of the Operator.

3.14 *eircom* will issue invoices at the intervals and frequency contained in the SB-WLR Product Description. There are multiple cycles per month for invoicing and providing billing information. The Operator will pay *eircom* within 30

days from the date of any invoice for SB-WLR ("Due Date").

3.15 The Operator may request that temporary off service ("TOS") be applied to a line. Rental for the line will continue to apply while TOS remains in effect until the line is ceased.

3.16 There will be no break in service as a result of SB-WLR being applied to a customer account.

3.17 Provision of this service shall be in accordance with the Single Billing through Wholesale Line Rental Service Level Agreement(s) published on eircom's website. The controlling document is the latest version of the above titled document(s) published on eircom's website as agreed with the National Regulator following negotiation with industry if appropriate.

Management of SB-WLR Customers' Listing Facility or (the "Facility")

4.1 For an interim period eircom will provide a Facility whereby in respect of the SB-WLR Customer Listings, eircom will:

a) refrain from deleting a SB-WLR Customer's Listing in the NDD and eCDD when implementing an order from SB-WLR; and
b) at the Operator's request and using the information provided by the Operator shall manage the insertion, change and deletion of SB-WLR Customer Listings; and

4.2 Subject to the terms of this Schedule, eircom shall provide the Facility in accordance with the SB-WLR IPM. The Facility shall be available only on an interim basis until the final solution is available.

4.3 eircom shall only be obliged to provide the Facility to the Operator for SB-WLR Customers.

4.4 The Operator shall only be entitled to submit requests for the Facility in respect of its own SB-WLR Customer(s).

4.5 Where the customer ceases to be a SB-WLR Customer, the Operator shall not be entitled to submit any requests for the Facility and eircom shall not be obliged to provide the Facility pursuant to such request.

4.6 The Operator shall ensure that any agreements with a SB-WLR Customer include terms and conditions to ensure that the SB-WLR Customer complies with the terms and conditions of this Service Schedule. Furthermore the Operator shall formally advise its customers that eircom will continue to retain or will be provided with the SB-WLR Customer Listing for the specific purposes outlined herein.

4.7 The Operator shall be responsible for the accuracy, timeliness and completeness of the information provided to eircom for the purpose of the Facility including ensuring compliance with Data Protection Legislation with

respect to Ex-directory Customers.

4.8 The Operator shall comply with all applicable laws, statutes, and regulations applicable to operation of the Facility including without limitation Data Protection Legislation in respect of requests for the Facility.

4.9 *eircom* may restrict use of the Facility, if required, in accordance with any applicable law and regulation.

4.10 The Operator hereby warrants the accuracy of the Customer Listing submitted by the Operator to eircom or the National Directory Database up to the date of the customer transferring to another Operator or eircom by means of Single Billing - Wholesale Line Rental.

4.11 *eircom* hereby warrants the accuracy of the Customer Listing contained in the National Directory Database up to the date of the eircom customer transferring to another Operator by means of Single Billing - Wholesale Line Rental.

5. Charging

5.1eircom shall invoice the Operator for the charges relating to Wholesale Line Rental and Ancillary Services in accordance with Annex B of this Agreement and as set out in the *eircom* RIO Price List. The Operator shall be liable for invoiced amounts in accordance with Annex B of this Agreement

To be published as a stand alone document on eircom's wholesale website

Non-Disclosure Agreement

between

***eircom* Ltd**

and

Operator

for

Interconnect Services

INDEX

1 Introduction
2 Definitions and Interpretation
3 Non-Disclosure Agreement
4 Notices
5 Assignments of Rights and Obligations
6 Entire Agreement
7 Waiver
8 Severability
9 Amendments
10 Relationship of Parties
11 Governing Law

Signatory Page

Annexes

Annex A Definitions

THIS AGREEMENT is made on date

Between

Operators Name, ("Operator") having its registered office at Operators Address

and

eircom Ltd (herein after referred to as *eircom*) having its registered office at 114 St. Stephen's Green West, Dublin 2.

Together referred to as the "Parties" and individually as the "Party"

1. Introduction

1.1. Preface

(a) The following constitutes the Non-Disclosure Agreement between *eircom* and the Operator:

to apply to discussions between the Parties and the exchange of information for purposes of any offerings made by eircom for Interconnection Services.

(b) This Non-Disclosure Agreement takes effect from the date

Whereas

(a) The Operator is authorised under the Authorisation Regulations to provide an electronic communications network or electronic communications service pursuant to the provisions of the Authorisation Regulations and is entering into this Agreement for the purposes relating to Interconnection Services.

(b) *eircom* is required to publish a Reference Interconnection Offer as the basis for making Interconnection Services available to Operator in accordance with the obligations set out therein.

(c) Whereas, in their businesses the Parties to this Agreement have valuable information and it is necessary to protect certain of this information as Confidential Information and as valuable trade secrets.

(d) Whereas, through doing business with each other for the purpose of the Interconnection Services either Party may become acquainted with or come into possession of Confidential Information belonging to the other Party. In such cases the Party providing this information shall be designated "the Owner", and the Party receiving this information shall be designated "the Recipient".

In consideration of the mutual covenants and obligations contained in this Agreement, the Parties HEREBY AGREE AS FOLLOWS:

2. Definitions and Interpretation

2.1. In this Agreement, except if the context requires otherwise, words and expressions are as defined in Annex A

2.2. Terms defined in relevant European Union legislation on the liberalisation of the telecommunication services market or in consequent Irish implementing legislation (which, for the avoidance of doubt includes Decisions published by the National Regulator) shall, where used in this Agreement, have the meanings ascribed to them in such legislation.

3. Non-Disclosure Agreement

For the purpose of this Agreement "Confidential Information" includes:

3.1. information of whatever nature relating to either Party or its customers which is not publicly available and which is obtained as a result of or in connection with this Agreement or the negotiations thereof or the activities of either Party in relation to Interconnection Services information acquired either in writing, electronically or orally from or pursuant to discussions with:

3.1.1. the directors, officers or employees of either Party, and/or

3.1.2. either Party's professional advisers;

3.2. analyses, compilations, studies and other documents prepared by or on behalf of either Party and of their employees or advisers;

3.3. information of whatever nature which is not in the public domain relating to either Party obtained by observation by the other Party; and

3.4. all information disclosed by either Party, whether orally or in writing shall be considered Confidential information, unless otherwise stated.

3.5 These terms and conditions will not apply to any Confidential Information which:

3.5.1 is or becomes publicly available through no fault of the Recipient;

3.5.2 can be demonstrated to be already known to the Recipient at the time of disclosure;

3.5.3 information that is received without obligation of confidence from a third party who did not acquire it under an obligation of confidence from either Party or that is independently developed by the Recipient.

3.5.4 is required to be disclosed by a government regulatory body or a court or other comparable authority of competent jurisdiction.

3.5.5 Is released from the provisions of this Confidentiality Agreement by the written consent of the owner. If only a portion of the Confidential Information falls to be disclosed under this clause, the remainder shall continue to be subject to the prohibitions and obligations set out herein

3.6 Therefore, in consideration of the disclosure to each Party of Confidential Information by the other and in consideration of the mutual promises contained in this Agreement, it is agreed as follows:

3.6.1 each Party undertakes with the other that the Confidential Information shall be used by it only for the purpose of or to facilitate the provision of Interconnection Services in accordance with the terms of this Agreement and for no other purposes whatsoever.

3.6.2 subject to sub paragraphs 3.6.3.3 and 3.6.3.6 below, neither Party will without the prior written consent of the other disclose or use or cause to be disclosed or used by any third party at any time any Confidential Information.

3.6.3 to secure the confidentiality attaching to Confidential Information, each Party and Associated Company who is allowed access to Confidential Information pursuant to sub-paragraph 3.6.3.3 below shall:

3.6.3.1 keep all documents and any other material bearing or incorporating any of the Confidential Information at one of the places in which the Recipient conducts its business or subject to sub-paragraph 3.6.3.3 below at the usual place of business of an Associated Company of the Recipient;

3.6.3.2 in relation to the reproduction, transformation, or storage of any of the Confidential Information in an externally accessible computer or electronic retrieval system, shall exercise no lesser security or degree of care than that Party applies to its own Confidential Information of an equivalent nature;

3.6.3.3 allow access to Confidential Information exclusively to those agents, professional advisers, Associated Companies and employees of the Recipient who have reasonable need to see and use it to facilitate Interconnection Services which may be amended by written notification in accordance with Paragraph 9 of this Agreement and shall inform each of the said agents, professional advisers, Associated Companies and employees of the confidential nature of the Confidential Information and of the obligations on the Recipient in respect thereof and undertake to use all reasonable endeavours to ensure that such agents, professional advisers, Associate Companies and employees honour these obligations.

3.6.3.4 on reasonable request of the Owner made at any time shall deliver up to the Owner, as far as reasonably practicable, all documents and other material in the possession custody or control of the Recipient or Associated Companies of the Recipient that bear on or incorporate any part of the Confidential Information;

3.6.3.5 treat in the same manner as is agreed to treat Confidential Information, all copies of any analyses, compilations, studies or other documents prepared by it or its advisers containing or reflecting or generated from any Confidential Information;

3.6.3.6 allow access to the Confidential Information only to suppliers of the Recipient who have reasonable need to see and use this Confidential Information for the purposes of supply of services and products to the Recipient. In which case the Recipient undertakes to use all reasonable endeavours to ensure that such suppliers comply with conditions set out in this Clause 3.6 as described above for their use of the Confidential Information.

3.7 Each Party understands and acknowledges that neither is making any representation or warranty, express or implied as to the accuracy or completeness of the Confidential Information and neither of them will have any liability to the other or any other person resulting from the Confidential Information or its use thereof.

3.8 Any disclosure of confidential information by one party to the other party shall not in any way serve to create on the part of the Owner, a licence to use or any proprietary right in the confidential information or any other proprietary product, trade mark copyright or other right of the owner.

3.9 The Parties acknowledge and agree that damages would not be an adequate remedy for any breach of this undertaking by either of them. In the event of a breach or threatened breach of this Agreement by either Party, the other Party ("the aggrieved Party") shall be entitled to the remedies of injunction, specific performance and other equitable relief for any threatened or actual breach of this Agreement and, without prejudice to the foregoing, the other Party agrees to indemnify the aggrieved Party against any loss, claims, damages or liabilities by it as a result of or arising out of any such breach PROVIDED ALWAYS such liability is limited to:

one million two hundred and fifty thousand EURO (EUR1,250,000) for any one event or series of connected events and two million five hundred thousand EURO (EUR2,5000,000) for all events (connected or unconnected) in any period of 12 calendar months in respect of information provided for all Interconnection Services.

3.10 Unless the Parties enter into an Interconnect Agreement, the Parties agree that the Non-disclosure Agreement obligations will exist for a period of 2 years following termination or expiry of this Agreement other than in the exceptional circumstances where the Owner of the information notifies the Recipient that the obligations regarding specific information shall remain in force for a period of five, (5) years following termination or expiry of the Agreement.

3.11 The Parties agree that in the event they enter into an Interconnect Agreement the terms set out herein will apply to Confidential Information exchanged thereafter. Upon termination of the Interconnect Agreement, the

Parties agree that in respect of Confidential Information the obligations will exist for a period of 2 years following termination or expiry of this Agreement other than in the exceptional circumstances where the Party that owns the information notifies the Receiving Party that the obligations regarding specific information shall remain in force for a period of five, (5) years following termination or expiry of the Agreement.

3.12 The parties to this agreement acknowledge that information has a time value and agree to work together to develop a process going forward to ensure that information is declassified on a regular and ongoing basis. The time frame between receipt of confidential information and the de-classification of such information shall be reviewed within twelve, 12, months

4. Notices

4.1. Notices shall be duly served if:

4.1.1. delivered by hand, at the time of actual delivery;

4.1.2. sent by facsimile, upon its receipt being confirmed;

4.1.3. sent by recorded delivery post, 4 calendar days after the day of posting.

4.2. Except if otherwise specifically provided all notices and other communications relating to this Agreement shall be in writing and shall be sent as follows:

If to the Operator:
Name Telephone 01
Address Facsimile 01
Address
Address

If to *eircom*:
Head of Wholesale Regulatory Operations, Telephone 01 7015413
Wholesale Facsimile 01 4752522
eircom
St. Stephen's Green West
Dublin 2

4.2.1. or to such other addresses as the Parties may notify from time to time pursuant to this clause 4.2.

5. Assignment of Rights and Obligations

5.1. Unless otherwise agreed in writing, and subject to clause 5.2, no rights, benefits or obligations under this Agreement may be assigned or transferred, in whole or in part, by a Party without the prior written consent of the other Party.

5.2. No consent is required under clause 5.1 for an assignment of rights, benefits or obligations under this Agreement (in whole or in part) to a successor to all or substantially all of the assigning Party's Network to an associated company provided that such successor or Associated Company is authorised under the Authorisation Regulations to operate the Network of the assigning Party.

5.3. The assigning Party shall promptly give notice to the other Party of any assignment permitted to be made without the other Party's consent. No assignment shall be valid unless the assignee/successor agrees in writing to be bound by the provisions of this Agreement.

6. Entire Agreement

6.1. This Agreement represents the entire understanding of and agreement between the Parties in relation to the subject matter of this Agreement, and, unless otherwise agreed in writing, supersedes all previous understandings, commitments, agreements or representations whatsoever, whether oral or written.

7. Waiver

7.1. The waiver of any breach of, or failure to enforce, any term or condition of this Agreement shall not be construed as a waiver of any other term or condition of this Agreement. No waiver shall be valid unless it is in writing and signed on behalf of the Party making the waiver.

8. Severability

8.1. The invalidity, unenforceability of any provision of this Agreement shall not affect the validity or enforceability of the remaining provisions of this Agreement.

9. Amendments

9.1. Amendments and supplements to this Agreement, including its Annex A shall in order for them to be valid, have been drawn up in writing, dated and signed by both Parties. Such amendment and supplements shall not affect the validity or enforceability of any of the remaining provisions of this Agreement.

10. Relationship of Parties

10.1. The relationship between the Parties is that of independent contractors. Nothing in this Agreement shall be construed to make either Party hereto an agent, joint venture or partner of or with the other. Neither Party is granted any right of authority or agency, expressly or implicitly, on behalf of, or in the name of the other nor any right to legally bind the other in any manner whatsoever. Neither Party shall become liable through any representation,

act or omission of the other which is contrary to or unauthorised by the provisions of this Agreement.

11. Governing Law

11.1. The interpretation, validity and performance of this Agreement shall be governed in all respects by the laws of Ireland and the Parties submit to the exclusive jurisdiction of the Irish Courts.

IN WITNESS WHEREOF THIS AGREEMENT WAS ENTERED INTO THE DAY AND YEAR FIRST ABOVE WRITTEN.

SIGNED for and on behalf of

Operator:

_____

[SIGNATURE]

_____

[NAME (BLOCK CAPITALS)]

_____

[POSITION]

_____

[Date]

SIGNED for and on behalf of

***eircom*:**

_____

[SIGNATURE]

_____

[NAME (BLOCK CAPITALS)]

_____

[POSITION]

_____

[DATE]

Annex A

Definitions

In this Agreement, words and expressions have the following meanings:

"Associated Company"	A Subsidiary and Holding Company of such Party, the terms Subsidiary and Holding Company having the meanings ascribed thereto in section 155 of the Companies Act 1963 – 2001 or any subsidiary of any such Holding Company.
"Authorisation Regulations"	European Communities (Electronic Communications Networks and Services) (Authorisation) Regulations 2003 (SI 306 of 2003)
"Interconnection Services"	means the services available through eircom's Reference Interconnect Offer.
"Intellectual Property":	Any patent, copyright, design, trade name, trademark, service mark or other intellectual property right (whether registered or not) including without limitation ideas, concepts, know-how, techniques, designs, specifications, drawings, blueprints, tracings, diagrams, models and other information relating to any such intellectual property.
"National Regulator":	The Commission for Communications Regulation.
"Party":	A party to this Agreement.

To be published as a stand alone document on eircom's wholesale website

CALLING LINE IDENTIFICATION (CLI) CODE OF PRACTICE

1. PREFIX

The provision of Calling Line Identification ("CLI") services requires that there is end to end availability and control of the CLI messages, and that these messages are generated in a consistent way and one which respects the law in respect of data protection and privacy. Unless this is achieved the CLI service cannot be provided efficiently as the status of the message (e.g. the validity of the numbers displayed) cannot be guaranteed by the Provider of the service and/or might infringe users' rights. Therefore, consistency is required between the network where the messages are generated (the Originating Network) and the network where the messages are displayed (the Terminating Network). Clearly where these are the same network there is less likelihood of any problem but where interconnection between two or more networks occurs, some way of ensuring that all networks adhere to the same rules is required if customers of CLI display services are to have confidence in such a service and if the CLI needs of the emergency services are to be met.

Against this background, this Code of Practice was designed to achieve a number of objectives:

(a) to encourage operators to follow a consistent set of rules for CLI to enable the provision of CLI across network boundaries;

(b) to ensure that the requirements of Data Protection legislation and of the Emergency Services are met;

(c) to provide a reasonable balance between consumer and producer interests;

(d) to comply with EU practices and principles in respect of CLI;

(d) to be flexible so that this set of rules can evolve in an efficient manner to reflect changing technological and other developments.

2. SCOPE

2.1 <u>Networks Covered</u>

This Code of Practice covers all authorised operators of Irish electronic communications networks interconnected with *eircom* (as well as *eircom* itself) where such public networks include PSTN, ISDN or GSM public interfaces.

2.2 <u>Call Types Covered</u>

All calls originating or terminating in Ireland which are carried to or from *eircom* by one or more of the networks covered by this Code of Practice (for

the avoidance of doubt, transit calls that do not either originate or terminate in Ireland are not covered).

3. REQUIREMENTS

To ensure these various requirements are met, all parties interconnecting with *eircom* are required and agree to comply with the European Telecommunications Platform (ETP) Guidelines for Calling Line Identification[2]. Furthermore, all parties hereby also agree that the following qualifications should apply to the relevant paragraphs of the ETP Guidelines in respect of the application of these guidelines and/or operation of CLI in practice, as appropriate:

Section 3.1.2 Blocking and Unblocking Codes
The blocking/unblocking codes used on the Irish fixed network are 141 and 142, respectively;

Section 3.3 Providing a CLI
Any such subscriber-provided CLI shall only be implemented following explicit approval by the National Regulator and provided the Network Operator offers such a product. The National Regulator will decide on requests for subscriber-provided CLI in accordance with guidelines agreed with industry (currently document NAP80);

Section 3.4 Mobile Telephones
Not currently applicable;

Section 4.8 Caller Provided CLI
Any such subscriber-provided CLI shall only be implemented following explicit approval by the National Regulator and provided the Network Operator offers such a product. The National Regulator will decide on requests for subscriber-provided CLI in accordance with guidelines agreed with industry (currently document NAP80);

Section 4.9 Premium Rate & Shared Revenue Numbers
The use of Premium Rate numbers for CLI purposes is not permitted, as agreed between the National Regulator and industry;

Section 4.10 Non Geographic numbers
The use of non-geographic numbers apart from premium rate/ shared revenue numbers is permissible subject to explicit approval from the National Regulator and provided the Network Operator offers such a product. Each such case will be decided in accordance with guidelines agreed between industry and the National Regulator (currently document NAP80);

Section 5.5 Call Return Service
Section 5.5 is not applicable.

[2] The ETP Guidelines can be found at:
http://www.etp-online.org/downloads/02_051_CLI_Guidelines_Sep_2002.pdf

To be published as a stand alone document on eircom's wholesale website

Annex B
Billing and Payment - Relevant Forms

Billing Dispute Notification Form

Company Name	Invoice being disputed	
Company Address	Invoice Amount	
Email	Invoice Date	
Contact Name.	Amount being disputed	
Contact Number	Billing Dispute Reference	

Specific Billing Dispute Details

This Dispute relates to ---------(e.g. Traffic Volumes, rates are incorrect)

This is to inform Billing Operator that Company X intends to apply the Billing Dispute procedures as per Clause 6 Annex B, Billing and Payment, of the signed Interconnect Agreement between the two parties.

Summary of Billing Dispute – Fill as appropriate. This form is to be accompanied by detailed information on Billing Dispute in accordance with Clause 7, Annex B, Billing and Payment, of the signed Interconnect Agreement between the parties.

Service Schedule Affected	Nature of Discrepancy				Comments
		Calls	Duration	Charge	
	Invoice Total				
	Own Total				
	Invoice Total				
	Own Total				
	Invoice Total				
	Own Total				

Signed_____Date_____

Sample Detailed Dispute Information

Invoice Date **Invoice Number** **Dispute Reference**

Service Schedule **Description**

eircom Data

eircom Node	OLO Node	eircom Route	OLO Route
DCTA	OLO-N1	OLO-IC1	EIR-OG1

	Calls				Mins			
Day	Peak	Off-Peak	Weekend	Total	Peak	Off-Peak	Weekend	Total
Day 1								
Day 2								
Day 3								
…								
…								
Day 29								
Day 30								
Day 31								
Total								

OLO Data

eircom Node	OLO Node	eircom Route	OLO Route
DCTA	OLO-N1	OLO-IC1	EIR-OG1

	Calls				Mins			
Day	Peak	Off-Peak	Weekend	Total	Peak	Off-Peak	Weekend	Total
Day 1								
Day 2								
Day 3								
…								
…								
Day 29								
Day 30								

Extension Request Template

Company Name

Billing Dispute Reference

Company Address

Invoice being disputed

Contact Name.

Contact Number
Email Address:

Company X wishes to reasonably request that Company Y agree to extend the timelines associated with this Billing Dispute.

Reason for the extension request:

Period of extension required:

Signed _____ Date: _____
Company X

Company Y wishes to inform Company X that it accepts/rejects Company X's request to extend the timelines associated with this Billing Dispute.

Reason for Rejection:

Signed: _____ Date:_____
Company Y

Failure to Comply Notice

Company Name	Invoice being disputed	
Company Address	Billing Dispute Reference	
Contact Name.	Contact Number Email Address	

Pursuant to Clause 7.9 of Annex B, Operator X wishes to inform Operator Y of its failure to Comply with the Billing Dispute Process.

Operator Y has failed to comply with the Timeframes / Provision of Information Requirement of the Billing Dispute Process.

Specific Failure to Comply Details

Upon correction of this matter of non-compliance within two weeks of the date of issue of this Notice, the Billing Dispute Process shall recommence at the appropriate stage in the timeline.

Should Operator Y fail to rectify this matter within the two-week timeframe, this Billing Dispute will be deemed resolved in favour of Party X.

Yours Sincerely,

_____

Operator X

Billing Dispute Closure Form

Operator X Name

Operator Y Name

Operator X Address

Operator Y Address

Invoice disputed

Amount being disputed

Invoice Date

Dispute Reference

Operator X accepts that this Billing Dispute has been resolved in favour of Operator X/Y. Operator X/Y will forward €_____ to Operator X/Y within 10 working days of resolution. Resolution of this Billing Dispute shall not prevent either Party disputing a different aspect of this same invoice.

Signed _____ Date _____
Operator X

Operator Y accepts that this Billing Dispute has been resolved in favour of Operator X/Y. Operator X/Y will forward €_____ to Operator X/Y within 10 working days. Resolution of this Billing Dispute shall not prevent either Party disputing a different aspect of the same invoice.

Signed _____ Date _____
Operator Y

To be published as a stand alone document on eircom's wholesale website

Interconnect Paths
Order Forms

Order Form for Interconnect Paths 2Mbit (Section 1)

Order Details - sent by Operator X to eircom.

To: [*eircom Order contact point*]		From: [*Operator X Order contact point*]
Date:	Operator X Reference No.:	
Order Type : Provide ☐	Rearrangement ☐	Cessation ☐
Signed on behalf of Operator X		

Transmission Information

Type of Interconnect (ISI, CSI, STM-1 interconnect access bearer, ISH, CSH)	
A-End (*eircom* Node / PPC Annex A exchange) :	
B-End (Point of Interconnect / PPC Point of Handover):	
Bearer No (to be completed by OLO) 1st,2nd,3rd.or 4th STM-1 (where applicable)	
Port no. on STM-1(VC12)	
Date Site Access available to *eircom* (not applicable to PPC interconnect paths)	
New B-End (In case of Rearrangement) :	
Circuit ID (In case of Rearrangement) :	
Number of Paths :	
Comments :	

Switching Information

eircom Node :*	
Operator X Interconnect Node	
New Operator X Interconnect Node (In case of Rearrangement) :	

Circuit ID (In case of Rearrangement) :	
Number of Paths :	
Comments :	

Order details (to be completed by eircom)

Account Number :	Equipment Code :
Service Order Number :	DPL Circuit No's :
Signed on behalf of *eircom*:	
Date:	

Order Form for Interconnect Paths (Section 2)

Operator Node Name		
Operator Node Point Code		
eircom Node Name		
eircom Node Point Code		
Traffic direction (With respect to *eircom*)		
Traffic Overflow Choices for Originating	First Choice	
	Second Choice	
	Final Choice	

To be completed by eircom

eircom Interconnect Link Designations	
eircom Route Name	

***eircom* Path Designations** (e.g. 30N0XX)	***eircom* Circuit Designations** (e.g. DPL 2XXXXX)	**CIC numbers**

SIGNALLING ALLOCATIONS		
***eircom* Path Designations** (e.g. 30N0XX)	***eircom* Circuit Designations** (e.g. DPL2XXXXX	**CIC numbers**

Note: to be updated when FRIACO Order Form is signed off

To be published as a stand alone document on eircom's wholesale website

Partial Private Circuits
Order Forms

Order Form for PPC STM-x Transport Link

To: [*eircom Order contact point*]		From: [*Operator X Order contact point*]
Date:	Operator X Reference No.:	
Order Type :		
Provide ☐	Rearrangement ☐	Cessation ☐
Signed on behalf of Operator X		

Transmission Information

Type of Transport Link (ISH or CSH):	
Capacity required (STM-1 or STM-4):	
A-End (*eircom* Node / PPC Annex A exchange) :	
B-End (Point of Interconnect / PPC Point of Handover): If ISH, provide x, y co-ordinates with address	
Date site access available to *eircom*	
Channelised structure (34mb, 2mb):	
New B-End (In case of Rearrangement) :	
Circuit ID (In case of Rearrangement) :	
Comments :	

***eircom* use only**

Account Number :	Equipment Code : CSH/ISH soc codes
Service Order Number :	DPL Circuit No's :
Signed on behalf of *eircom*:	
Date:	

Eircom Carrier Services PPC Order Request

OLO:		**Order Date:**	
OLO order reference:		**Order placed by:**	
OLO contact tel. No.		**OLO account number:**	
		OLO contact email:	

Services Required			
Provision of new service		Upgrade of existing service	
Re-arrangement of existing service		Downgrade of existing service	
CESSATION OF EXISTING SERVICE			

Category	**Service**	**Capacity**	**Quantity**	**Presentation**	**Date Required – as per SLA**
X	**Partial Private Circuit**				
	2mb CSH Transport Link	1984kb		G703	
Y	**Partial Private Circuit**				
	End User Link (data): 64kb	64kb		X21 ☐ V35 ☐	
	>64kb			X21 ☐ V35 ☐	
	1984kb	1984kb		X21 ☐ V35 ☐	
	2048kb	2048kb		G703BNC ☐ G703RJ45 ☐	
	34mb	34mb		G703BNC ☐ G703RJ45 ☐	
	STM-1	155mb		G703BNC ☐ G703RJ45 ☐	
	Channelised E1 bearer	1984kb		G703	

	To be provided off Transport Link / E1 channelised bearer no. (eircom cct ID) Payload Position / Timeslot (T/S or KLM)	

Circuit Connection Information

A-end Information
Contact Name: **Telephone no.** **Fax no.** **Address:** *eircom* telephone number (if different from above):* This information is required to confirm the serving exchange at which the Transport Link terminates

*Not Mandatory

B-end Information
Contact Name: **Telephone no.** **Fax no.** **Address:** *eircom* telephone number (if different from above):* This information is required to confirm the local exchange in which the lines are connected

*Not Mandatory

Specific Requirements
Remarks:

OAO Billing Address
Contact Name: **Address:**

Thank you for your order – please send to carrierservices@eircom.ie
File name should be in the following format:
"ORDER-[OAO NAME]-[CIRCUIT TYPE]-[OAO REF]-[DATE]"

To be published as a stand alone document on eircom's wholesale website

Carrier Pre Selection
Service Level Agreement

Definitions:

Working Day 0800 to 1700 Monday to Friday excluding Public Holidays.

Review

Reviews of this Service Level Agreement shall take place in accordance with the normal process for annual review of the Interconnect Agreement.

Dispute Resolution

A special dispute resolution process as set out below will apply where *eircom* reject an Operator forecast or fail to accept or reject a forecast. Except where the Operator agrees with the reasoned rejection, the matter will immediately be escalated to Level 2 dispute resolution as per this Interconnection Agreement. If an agreement is not reached within five working days of such escalation either party can raise the matter to the National Regulator for dispute resolution. Notwithstanding these provisions a party shall not be prevented from referring a dispute to the National Regulator without recourse to Level 2 escalation, or from seeking interlocutory or other immediate or equivalent relief.

All other disputes arising (i.e. non-forecast related) shall be subject to the dispute resolution process specified elsewhere in this Interconnection Agreement.

Metrics

eircom shall be responsible for monitoring and measuring performance metrics and shall report on the agreed metrics to the National Regulator and the operator on a monthly basis within 10 Working Days of the end of the month.

The National Regulator may aggregate and publish these statistics.

SLA Schedule

The SLA schedule is set out in the following tables. Where limitations apply to any activity in this SLA, these are detailed after the table to which they apply. The party with the obligation in all instances is *eircom*.

Table 1: Forecasts

Activity Number	Activity Description	Performance Metric	Performance target	Contractual payment for not meeting Performance Metric Target
1	Acceptance or rejection of forecast	Written acceptance or reasoned rejection of forecast to be provided by 17.00 of the fifth working day following receipt of forecast by the AP.	100% If *eircom* fail to accept or reject a forecast, or the OAO disagrees with the reasoned rejection the matter will immediately be escalated to Level 2. If an agreement is not reached within five working days of such escalation either party can raise the matter to the National Regulator for resolution.	No penalty will apply unless so determined by the dispute resolution process

This activity in Table 1 above is dependant on the forecasts being provided to the contact point and in the format documented in the effective CPS Industry Process Specification.

Table 2: Order Acceptance and Completion

Activity Number	Activity Description	Performance Metric	Performance target	Contractual payment for not meeting Performance Metric Target.
2	Acceptance or Rejection of order submitted via the electronic system	Advice of acceptance or rejection of each order submitted by 17.00 on the Working Day following the Working Day in which the order is submitted	98% of orders in accordance with performance metric	EURO 12.70 per line affected per Working Day or part thereof of delay
3	Activation of accepted CPS order and notification of completion	Advice of activation by 17:00 on the Working Day following the Working Day in which the order is activated but no later than 17:00 on the fourth Working Day after the order is accepted	98% of orders in accordance with performance metric	EURO 25.39 per line affected per Working Day or part thereof of delay

Orders received outside the Working Day shall be considered as received on the following Working Day.

Table 3: Hub Availability

Activity Number	Activity Description	Performance Metric	Performance target	Contractual payment for not meeting Performance Metric Target.
4	Availability of *eircom* electronic order system (Hub)	Percentage availability of the electronic order system excluding planned system downtime in accordance with the provisions of Activities 5 and 6.	99% availability during the Working Day. 95% availability outside the Working Day. Both measured as an average for the quarter	EUR 1269.74 per incident per hour or part thereof per CPS operator for outages during the Working Day. EURO 1269.74 per incident per 4 hour period or part thereof per CPS operator for outages outside the Working Day.
5	Planned system down time	Total planned system downtime per Quarter - 48 hours per Quarter outside the Working Day, subject to no more than three Planned Outages during the Quarter	100%	No penalty will apply – excess outage covered under activity 4
6	Notification of planned system downtime	Notification to agreed contact points to be received 10 working days prior to the commencement of the outage unless otherwise agreed by the Parties and such agreement should not be unreasonably withheld.	100%	No penalty will apply – excess outage covered under activity 4
7	Notification of unplanned system down time	Notification to agreed contact points by telephone. To be received 30 minutes during the Working Day and 2 hours outside the Working Day after the commencement of the outage. Time and duration of the outage to be confirmed by 17:00 on the Working Day following that in which the outage occurred.	98% in accordance with performance metric. Agreed contact points for such notice must default to a recorded messaging service within 15 seconds of call set-up.	EURO 1269.74 per incident per CPS operator

8	Progress updates during unplanned down time	Notification to agreed contact points by telephone of status updates of progress and anticipated restoration time. Every 2 hours during the Working Day. To be continued from 09:00 on the subsequent Working Day(s) until resolution	98% in accordance with performance metric Agreed contact points for such notice must default to a recorded messaging service within 15 seconds of call set-up.	EURO 1269.74 per incident per CPS operator

All availability measurements to be quarterly in arrears.

The activities in Table 3 above refer to the *eircom* hub on which the Operator places its orders. They do not apply to the facilities utilised by the Operator to connect to the AP hub nor do they apply to the *eircom* order handling system which is internal to the *eircom* organisation.

The notices provided in Activities 4, 5 and 6 above will be provided to the nominated contact of the Operator as provided in CPS Contacts Form. Activities 7 and 8 will only apply within the hours during which the Operator can commit to having appropriate personnel available to react to such notice.

Table 4: Problem Resolution

Activity Number	Activity Description	Performance Metric	Performance target	Contractual payment for not meeting Performance Metric Target.
9	Time to resolve order queries relating to rejection of orders, delays in acceptance/rejection of orders and delays in notification of delivery of service	Four hours in the working day to make sufficient information available to the Operator to address the query	98% in accordance with performance metric. This metric will only apply where the level of queries is less than 10% of the number of orders processed in the same period.	EURO 12.70 per line affected per hour of delay caused by *eircom*
10	Resolution of CPS activation faults affecting the CPS service	Faults to be resolved within four working hours of receipt of fault notification	98% in accordance with performance metric	EURO 12.70 per line affected per hour of delay caused by AP operator
11	Resolution of other access network faults affecting the CPS service	*eircom* to apply standard fault repair service levels	*eircom* to apply standard performance targets	Penalties, if any will be covered by the end user's contract with *eircom*

Table 5: Statistical reporting

Activity Number	Activity Description	Performance Metric	Performance target	Contractual payment for not meeting Performance Metric Target.
12	Submission of monthly performance metrics to the National Regulator and the Operator	Time to provide performance metrics to National Regulator and the Operator	17.00 of the tenth working day after end of month. First submission by 14.2.2000	Default Interest rate as per Interconnection Agreement on all penalties due

All penalties shall be payable within 5 Working Days following submission of the performance metrics to the National Regulator and interest at the default interest rate (as per Interconnection Agreement) shall apply on any overdue payments where any amount is outstanding for any period in excess of this time.

All payments shall be exclusive of VAT and any other taxes.

eircom shall at all times use reasonable endeavours to facilitate the measurement of the metrics stated herein and shall ensure that sufficient data is collected and collated to facilitate measurement.

To be published as a stand alone document on eircom's wholesale website

Reciprocal Non Geographic Number Portability

Service Level Agreement

1. **Definitions**

Working Day: 08:00 to 1700 Monday to Friday excluding Public Holidays

2. **Review**

2.1 This Service Level Agreement shall be subject to an annual industry review which will commence on 1 October 2000 and will conclude on 31 October 2000. Subsequent reviews will take place in accordance with the normal annual review process.

3 **Metrics**

3.1 Operators shall be responsible for monitoring and measuring performance metrics and should exchange, at the end of the month where problems have been highlighted, the relevant statistics where performance targets are not being achieved.

Activity Number	Activity Description	Performance Metric	Performance target	Contractual payment per operator for not meeting Performance target
1	Acceptance or Rejection of orders.	Within 24 Hours	99%	To be reviewed
2	Signed Customer Instruction Forms received with the order.	On same day as order received.	100%	To be reviewed
3	Failure to Port and at the agreed port time – provided there has been no re-arrangements attempted.	Within 30 minutes of agreed port time.	96%	To be reviewed

Activity Number	Activity Description	Performance Metric	Performance target	Contractual payment per operator for not meeting Performance target
4	Percentage of successful service restorations on receipt of a valid Emergency Restoration Request	Service restoration should be completed Within 4 hours	90%	To be reviewed
5	Sending correct orders	Number of error free orders sent	90%	To be reviewed
6	Correct Data Builds prior to porting.	Number of data-builds completed by the Recipient Operator prior to porting	95%	To be reviewed
7	Database updates	Within (a) 1hr of cut-over (b) 1hr of Cease	95%	To be reviewed
8	Number of porting failures resolved	Within 1hr	95%	To be reviewed
9	Completion confirmations sent	Within 1hr of cut-over	95%	To be reviewed

Any penalties shall in future be payable under the terms of this Interconnect Agreement.

To be published as a stand alone document on eircom's wholesale website

Sample Interconnect Network Plan

***eircom* - OAO**

Interconnect Network Plan

Note: A separate copy of the Network Plan will exist for each Operator

TABLE OF CONTENTS

1.INTRODUCTION

1.1 Scope of Plan

2. LOCATION OF INTERCONNECT NODES

2.1 OAO Nodes
2.2 *eircom* Nodes

3. TRAFFIC ROUTING PRINCIPLES.
3.1 *EIRCOM* TRAFFIC TOWARDS OAO INTERCONNECT NODES
3.1.1 From *eircom* national tertiary nodes
3.1.2 From *eircom* national tandem nodes
3.1.3 From *eircom* primary nodes
3.1.4 From *eircom* international tertiary nodes
3.2 OAO TRAFFIC TOWARDS *EIRCOM* INTERCONNECT NODES
3.2.1. Emergency Traffic
3.3 Call Origination from the eircom network
3.3.1 Tertiary nodes
3.3.2 Tandem nodes
3.3.3 Primary nodes

3.4 DESIGINATIONS AND ROUTINGS4. SIGNALLING

4.1 Signalling Link sets
4.2 eircom point codes

5. NUMBERING PLANS AND DIGIT ANALYSIS

5.1 GENERAL
5.2 *EIRCOM* TRAFFIC TOWARDS OAO
5.3 OAO TRAFFIC TYPES TOWARDS EIRCOM

6. TRANSMISSION

6.1 Points of Interconnect
6.2 Transmission Routing

7 Service Quality
7.1 Grade of Service for OAO to *eircom* Interconnect Nodes
7.2 Grade of Service for *eircom* to OAO Interconnect Nodes

8. TRAFFIC FORECASTING

9 Synchronisation

10 Number Portability

APPENDIX 1 NUMBER RANGE DISTRIBUTION

APPENDIX 2 SIGNALLING TEST SCHEDULE AND RESULTS

APPENDIX 3 TRANSMISSION & TRAFFIC FORECASTS

APPENDIX 4 DESIGNATIONS AND ROUTING ASSOCIATED WITH THE *eircom* INTERCONNECT NETWORK

Introduction

This document forms part of the *eircom*/OAO Interconnect Agreement and deals with network planning and design of the interconnect links. It will list the Traffic routing, Signalling, Numbering, Transmission and Traffic Forecasting as applied to OAO. Attached to this document is information on the distribution of number ranges across each switch in the OAO's network (Appendix 1), information on the Signalling test results(appendix 2), traffic and transmission forecasts (appendix 3, Designations and routings associated with the eircom Interconnect Network (appendix 4).

1.1 Scope of Plan:

The plan is:

- An agreed plan between *eircom* and OAO that fully reflects the interconnect status between both networks, over the 7 quarter forecasting period.
- To be reviewed yearly, but will include a quarterly rollover of forecasts in annex 1
- Focussed on the implications of quarter 4, 5, 6 developments on the network

Notwithstanding the above, changes can be made to the document from time to time, on a mutually agreed basis, to

- Reflect changes in the Reference Interconnect Offer (RIO)
- Minor changes in the network
- Any other changes which are necessary to fully reflect the interconnect status between both networks

Location of Interconnect Nodes

2.1 OAO Nodes

The OAO network contains the following Interconnect Node:

The OAO Network will contain X Nodes. Information for the following OAO Nodes, referred to in clause 9, is detailed:

Node Name	Node Abbreviation

The following diagram shows the OAO network layout

2.4 *eircom* Nodes

Information for the following *eircom* Interconnect Nodes is detailed:

Interconnect Nodes	**Node Abbreviation**
Adelaide Road, Dublin	ADLA
Dame Court, Dublin	DCTB
Crown Alley, Dublin	CRAD
Dolphins Barn, Dublin	DBND
Summerhill, Dublin	SRLD
Priory Park	PRPD
Cork Churchfield 1	CHFB
Cork Quaker Rd.	QKRA
Limerick Roches St.	LMKA
Limerick Castletroy	CTYA
Galway, Shantalla	SLAC
Galway, Mervue	MVWA
Waterford, Central	WTDC
Waterford, Tycor	TYCA
All other Nodes as required	

3. Traffic Routing Principle

3.1 eircom traffic

All *eircom* traffic towards OAO will be routed on an equal basis on bi-directional routes to OAO's Interconnect Nodes as detailed within appendix 4. This traffic is traffic as defined in the Service Schedules of Annex C. *eircom* network resilience is provided by dual switch Interconnect Nodes with mutual alternative routing.

3.2 OAO Traffic towards eircom Interconnect Nodes

All OAO traffic will be routed on an equal basis on bi-directional routes to eircom's Interconnect Nodes as detailed within appendix 4. This traffic is as defined in the Service Schedules of Annex C.

3.2.1 Emergency Traffic
Emergency traffic should be routed to eircom Tertiary Interconnect Nodes.

For all emergency calls, Calling Line Identity (CLI) will be sent from the OAO Network. In order to ensure completion of emergency calls, matching timeslots between OAO and eircom will be reserved on the Tertiary Interconnect Links specifically for routing of emergency calls.

The routing principles for emergency calls will be as follows:-
1) Tertiaries (normal outgoing timeslots)
2) Tertiaries (reserved outgoing timeslots)

3.3 Call origination from the *eircom* Network

3.3.1 Tertiary Nodes

eircom will route traffic using carrier access and / or carrier selection codes from its tertiary nodes towards the Operator on the incoming route from the other network as per Appendix 4. This route will now carry operator owned traffic in each direction.

3.3.2 Tandem Nodes

eircom will route traffic using carrier access and / or carrier selection codes from its tandem nodes towards the Operator on incoming routes from the other network(where they exist) or will route up the network to a tertiary node where such routes do not exist or in the case of overflow. The incoming route will now carry operator owned traffic in each direction.

3.3.3 Primary Nodes

eircom will route traffic using carrier access and / or carrier selection codes from its primary nodes on incoming routes from the other network (where they exist) or will route up the network to a tandem node where such routes do not exist or in the case of overflow. The incoming route will now carry operator owned traffic in each direction

3.4 Designations and Routings

The arrangements for route designations and routings for each traffic type can be seen in Appendix 4 of this document.

4. Signalling

4.1 Signalling Link sets

This section will list the link sets that are in place between OAO and *eircom*.
It will also state the number of signalling links (minimum of 1, although 2 links recommended by eircom) that make up each link set.

4.2 *eircom* Point codes

Node	Point Code
Tertiary Interconnect Node at Adelaide Road (ADLA)	105
Tertiary Interconnect Node at Dame Court (DCTB)	111
Tertiary Interconnect Node at Adelaide Road (ADLB)*	100

Tertiary Interconnect Node at Dame Court (DCTA)*	110
Crown Alley, Dublin (CRAD)	280
Dolphins Barn, Dublin (DBND)	250
Summerhill, Dublin (SRLD)	210
Priory Park (PRPD)	300
Cork Churchfield 1 (CHFB)	500
Cork Quaker Rd. (QKRA)	520
Limerick Roches St. (LMKA)	760
Limerick Castletroy (CTYA)	770
Galway, Shantalla (SLAC)	900
Galway, Mervue (MVWA)	880
Waterford, Tycor (TYCA)	715
Waterford, Exchange St. (WTDC)	710

others as required

** no longer offered as Interconnect Nodes*

4.3 OAO point codes

Node	**Point Code**

5. Numbering Plans and digit analysis

5.1 General

All Numbering Plans will be in line with the Irish Telephony Numbering document issued by the National Regulator (Commission for Communications Regulation).

5.2 eircom traffic towards OAO

Traffic Type	Access or STD Code	Comments
Termination	National / Local Number (see Appendix 1)	Nature of address indicator used
Customer Care Access	190x	Routed as required Note 1
Carrier Access Code	13xxx	13xxx sent on route
Carrier Selection code	13xxx + dialled digits	13xxx plus digits as dialled sent on route
Carrier PreSelection Code	13xxx + dialled digits	13xxx plus digits as dialled sent on route

Note 1: OAO and *eircom* may agree on alternative routing for this code.

5.3 OAO traffic types towards eircom

For International Access, National Termination and National Transit, as defined in Annex C, the OAO Interconnect node will pass to each of the *eircom* Interconnect Nodes only numbers in the national (including the trunk access prefix zero) and international number formats. National numbers will not be passed in the international format.

In order to ensure correct routing and accounting, the following defines the minimum *eircom* Number Plan required to be implemented in the OAO Digit Analysis:-

Traffic Type	**Access or STD Code**	**Comments**
International Access	00 + country code (note 1), (note 2) 00 800 + 8 digits (note 4)	'+' when dialled from a mobile will be translated to '00'.
Northern Ireland Access	048 Note 3	
National Termination	01 (Note 1) 02 (Note 2) (Note 1) 03 (Note 2) (Note 1) 04 (Note 2) (Note 1) 05 (Note 2) (Note 1) 06 (Note 2) (Note 1) 07 (Note 2) (Note 1) 09 (Note 2) (Note 1)	
National Transit	086, 087,	
Freefone Normal traffic Burst traffic	 180x all except level 71 1800 71	
LoCall normal traffic burst traffic	 189x all except level 71 1890 71	1891 is excluded from this service
CallSave normal traffic burst traffic	 185x all except level 71 1850 71	
Premium Rate Services normal traffic burst traffic	 15xx all except level 71 15xx 71	151x is excluded from this Service.
National Directory Inquiries	11811 118XX (except 11811 & 11818)	 OAO will translate this to 118XX23xxx before being passed to *eircom*
National Operator Assistance	10	OAO will translate this to 1023xxx before being passed to *eircom*.
International Operator Assistance	114	OAO will translate this to 11423xxx before being passed to *eircom*.

Emergency Services	999, 112	Where 999 is dialled OAO will translate this to 11213xxx before being passed to *eircom*. Where 112 is dialled OAO will translate this to 11223xxx before being passed to *eircom*.
Packet Access	1510, 1801	
Paging Access	082	
International Directory Inquiries	1198, 1197	OAO will translate 1198 to 1198x before being passed to *eircom*. 1197 will be passed without modification
Speaking clock	1191	
eircom Customer Care Access	1901 to 1905	
3rd Party Customer Care Access	1907, 1909	

Note 1: Following digits dialled will not be analysed.

Note 2: The digit analysis will be defined to the minimum number of digits required to identify the appropriate local/trunk rate for the available routing (including alternative routing) options.

Note 3: The *eircom* Interconnect Nodes will not convey 00353.

Note 4: The eircom Interconnect Nodes will convey Northern Ireland Codes prefixed with 0044.

6. Transmission

This section will detail the planned transmission arrangements as agreed between OAO and *eircom*. The transmission forecasting will be the output of the forecasting process specified in the Operations and Maintenance Manual and the tabular output of this process will be included in Appendix 3 of this document with separate forecasts for eircom to OAO traffic and OAO to eircom traffic.

6.1 Points of Interconnect

Eircom Node	OAO Node	Interconnect Type	Traffic Type	No. of 2m

6.2 Transmission Routing

Info here on Transmission diversity etc.

7 Service Quality

7.1 Grade of Service for OAO to Eircom Interconnect Nodes

All Interconnect Links to ***Eircom*** Tertiary Interconnect Nodes will be dimensioned based on a busy hour grade of service of .005 (i.e. .5% of offered calls offer across this link will experience congestion).

Traffic from OAO to an ***Eircom*** Tandem or Secondary Interconnect Node may be under dimensioned in terms of the expected busy hour traffic. Traffic that cannot be handled by these Interconnect Nodes will be offered to the Tertiary Interconnect Node. The Tertiary Interconnect Links are dimensioned for this expected traffic overflow from the Tandem and Secondary Interconnects Links.

7.2 Grade of Service for Eircom to OAO Interconnect Nodes

The network will offer high quality service under normal conditions, and will offer degraded service OAO under high traffic/failure conditions, such that the majority of call attempts will be successful.

Traffic routes from ***Eircom*** Interconnect Tertiary nodes to OAO Node shall be designed to operate at a busy hour grade of service of .005, that is .5% of calls offered to the route during the network busy hour will fail.

In case of failure of a single Tertiary Interconnect Node or Transmission system a reduced grade of service will be used. Total blocking of .3 is the maximum that should be allowed in the peak hour.

8. Traffic Forecasting

The traffic forecasting will be the output of the forecasting process specified in the Interconnect Operations and Maintenance Manual and the tabular output of this process will be included in Appendix 3 of this document with separate forecasts for *eircom* to OAO traffic and OAO to *eircom* traffic.

9. Synchronisation

Synchronisation can be provided from both e***ircom*** Tertiary nodes over either the PDH or SDH inter-connect.

10. Number Portability

This section shall reflect commercial number portability agreements between ***eircom*** and OAO, and shall be based on number portability solutions in the Technical Manual.

Appendix 1

Number Range Distribution.

This appendix contains the distribution of geographic number ranges across the OAO switches. It also indicates the routing for National Transit, Non geographic and International number ranges where appropriate.

1. Schedule of Allocation of Geographic Numbers

Reference Number: XXXX
Authorised Operator: OAO
Authorisation No: XXXX
Date: DD/MM/YYYY

NDC / Access Code	Block	Number Length	Geographic Numbering Area	Block Size

2. Schedule of Allocation of Non-Geographic Numbers

Reference Number: XXXX
Authorised Operator: OAO
Authorisation No: XXXX
Date: DD/MM/YYYY

Service*	Access Code	Number Range	Numbers Allocated	Comment

*The numbers may only be used for the services specified above, as defined in ODTR document 98/55.

Appendix 2

Signalling Test Schedule and Results.

This appendix contains the tests and results of the ISUP tests carried out between eircom and OAO.

Appendix 3

Transmission & Traffic Forecasts

This appendix contains the Transmission & Traffic Forecasts in accordance with the process specified in the eircom Interconnect Operations and Maintenance Manual.
Operator: OAO electronic communications **Date: DD/MM/YYYY** **Node:** OAO

Operator to provide one MicroSoft Excel sheet in soft copy in the following format for each of Operator's nodes.
Cells to list cumulative forecast requirement for 2Mbit links.

	Interconnect Node	**1st Qtr**	**2nd Qtr**	**3rd Qtr**	**4th Qtr**	**5th Qtr**	**6th Qtr**	**7th Qtr**
1	Castleblaney							
2	Cavan							
3	Drogheda							
4	Dundalk							
5	Mullingar							
6	Naas							
7	Churchfield B (Cork)							
8	Churchfield C (Cork)							
9	Mallow							
10	Bantry							
11	Clonmel							
12	Wexford							
13	Quaker Road							
14	Tralee							
15	Ennis							
16	Castlebar							
17	Bray							
18	Dunlaoire							
19	Sandyford							
20	Ship Street							
21	Clondalkin							
22	Crumlin							
23	Terenure							
24	Palmerstown							
25	Merrion							
26	Whitehall							
27	Blanchardstown							
28	Swords							
29	Belcamp							
30	Clontarf							
31	Carlow							
32	Birr							
33	Letterkenny							
34	Castlerea							

35	Waterford							
36	Tycor (Waterford)							
37	Castletroy (Limerick)							
38	Roches Street (Limerick)							
39	Roches Street B (Limerick)							
40	Mervue (Galway)							
41	Shantalla (Galway)							
42	Priory Park							
43	Dolphins Barn							
44	Crown Alley							
45	Summerhill							
46	Portlaoise							
47	Rathedmond (Sligo)							
48	Roslevin (Athlone)							
49	**Adelaide Road A**							
50	**Adelaide Road B**							
51	**Dame Court A**							
52	**Dame Court B**							

Appendix 4

Designations and Routings Associated with the *eircom* Interconnect Network

eircom Wholesale

August 2002

Introduction

Interconnect Networks that exist between *eircom* and Other Authorised Operators (OAO's) consist of a combination of many Interconnect Links between the two parties. Each Interconnect Link consists of single or multiple Interconnect Paths, with a single Path consisting of a 2Mbit/s circuit between the *eircom* network node and the operator network node.

Given the size and complexity of existing Interconnect Networks it is *eircom's* intention through this Appendix that a clear definition of Interconnect Path designations with respect to ownership can be detailed. Additionally, traffic routing rules that exist at each *eircom* Interconnect Node per offered service will also be detailed.

Interconnect Designations in Qualitative Terms

While 2Mbit/s connections between an *eircom* Interconnect Node and the Interconnect Node of another authorised operator are known as Interconnect Paths, these Paths can be of a unidirectional of bi-directional nature.

The designation of an Interconnect Path is defined by the traffic requirements of the operator that "owns" the Path. However, Interconnection Paths only carry traffic owned by one operator. The operator that receives the retail margin from the call is said to "own" the traffic.

This means that calls by customers of an operator, *eircom* for example, to another network operator's geographic numbers are owned by *eircom*. Likewise calls made by an OAO customer calling NTC numbers in *eircom's* network would also be *eircom* owned traffic as *eircom* receives the retail revenue less the origination cost for the originating network.

With the above as guidance, we can determine that both traffic types described above are proper to an *eircom* Billed Interconnect Path. In qualitative terms the following details the traffic to be seen on both Interconnect Path designations, "**eircom Billed**" or "**Operator Billed**"

Traffic Designations on *eircom* Billed Interconnect Paths:

1. Geographic traffic to be terminated **'off'** the *eircom* network, on an OAO's network.
2. Number Translation Code traffic originating off the *eircom* network for termination **'on'** the *eircom* network.
3. Calls made by a directly connected OAO customer prefixed by *eircom's* carrier access, carrier selection or carrier pre-selection code.

Traffic Designations on Operator Billed Interconnect Paths:

1. OAO originated traffic to geographic numbers to be terminated **'on'** the *eircom* network.
2. Number Translation Code traffic destined to be terminated **'off'** the *eircom* network, on an OAO's network.

3. Calls made by a directly connected *eircom* customer prefixed by an OAO's carrier access, carrier selection or carrier pre-selection code.
4. All transit traffic being offered to *eircom* for onward delivery.
5. All International traffic.

Interconnect Traffic Routings per Service Schedule

As Interconnect Paths carry traffic "owned" by the operator that receives the retail margin from the call, the following table will describe the routing available to each traffic type for either call origination, termination or transit as seen as offered per service schedule to date.

Eircom Services				
Service Schedule	**Service Title**	**Originating Network**	**Routing Description**	**Interconnect Path Designation**
102	*Eircom* National Termination	OAO Network	FEH	Operator Billed Paths
103	*Eircom* Call origination	Eircom Network	NEH	Operator Billed Paths
104	National Transit	OAO Network	Tertiary Interconnect Nodes Only	Delivered to *eircom* via an OAO Operator Billed path and exit the *eircom* network by the appropriate Service Schedule route designation
105	Access to *eircom* Premium Rate Services	OAO Network	Tertiary Interconnect Nodes Only	*Eircom* Billed Paths
106	Access to *eircom* Freefone Services	OAO Network	Tertiary Interconnect Nodes Only	*Eircom* Billed Paths
107	Access to *eircom* LoCall Service	OAO Network	Tertiary Interconnect Nodes Only	*Eircom* Billed Paths
108	Access to *eircom* Callsave Service	OAO Network	Tertiary Interconnect Nodes Only	*Eircom* Billed Paths
109	*Eircom* Universal Number	OAO Network	Tertiary Interconnect Nodes Only	*Eircom* Billed Paths

	Access			
110	*Eircom* Personal Number Access	OAO Network	Tertiary Interconnect Nodes Only	*Eircom* Billed Paths
111	*Eircom* National Directory Enquiries	OAO Network	Tertiary Interconnect Nodes Only	Operator Billed Paths
112	*Eircom* International Operator Assistance	OAO Network	Tertiary Interconnect Nodes Only	Operator Billed Paths
113	*Eircom* National Operator Assistance	OAO Network	Tertiary Interconnect Nodes Only	Operator Billed Paths
114	*Eircom* International Operator Assistance	OAO Network	Tertiary Interconnect Nodes Only	Operator Billed Paths
115	Emergency Services (999 / 112)	OAO Network	Tertiary Interconnect Nodes Only[3]	Operator Billed Paths
116	Packet Services Access	OAO Network	Tertiary Interconnect Nodes Only	Operator Billed Paths
Service Schedule	**Service Title**	**Originating Network**	**Routing Description**	**Interconnect Path Designation**
117	Paging Services Access	OAO Network	Tertiary Interconnect Nodes Only	Operator Billed Paths
118	*Eircom* Customer Care Access	OAO Network	Tertiary Interconnect Nodes Only	*Eircom* Billed Paths
119	International Access including Northern Ireland	OAO Network	Tertiary Interconnect Nodes Only	Operator Billed Paths
121	Access to *eircom* Internet Services	Eircom Network	Tandem Interconnect Nodes Only	*Eircom* Billed Paths
Operator Services				
205	Access to	Eircom	NEH[4]	Operator Billed

[3] Access to Service Schedule 115, Emergency Services (999 / 112) will be at the *eircom* Tertiary Nodes where possible but these calls will be accepted at all *eircom* Interconnect Nodes

[4] Near-End-Hand-Over for these Service Schedules is available from 26/09/02 from *eircom* AXE Interconnect

	Operator Premium Rate Service	Network		Paths
206	Access to Operator Freefone Service	Eircom Network	NEH[2]	Operator Billed Paths
207	Access to Operator Shared Cost Timed Service	Eircom Network	NEH[2]	Operator Billed Paths
208	Access to Operator Shared Cost Fixed Service	Eircom Network	NEH[2]	Operator Billed Paths
209	Access to Operator Universal Access Service	Eircom Network	NEH[2]	Operator Billed Paths
210	Access to Operator Personal Numbering Service	Eircom Network	NEH[2]	Operator Billed Paths
221	Operator Internet Access	Eircom Network	NEH	Operator Billed Paths

Further Clarifications

Near-End Hand-Over (NEH)

Near-End Hand-Over allows a call originated at a Primary exchange the opportunity to exit the *eircom* network at this Node, should the correctly designated Interconnect Path with free capacity be available towards the terminating operator.

Should capacity not he available at this point the Call Origination Routing Scheme, as published on the *eircom* web site, describes the controlling twinned Tandem Nodes that the call will rise toward in order to exit the *eircom* network. Calls approach Twinned Tandem Nodes from a Primary Node on a 50 / 50 distribution basis.

Should capacity at the Tandem Layer not be available the call will be passed onward to the *eircom* Tertiary Interconnect Nodes at Adelaide Road and Dame Court, where all operators support Interconnect Links. At this point should capacity not be available the call will fail.

Nodes Only. Further information is available from your *eircom* Wholesale Account Manager or the *eircom* Interconnect Planning Manger

Far-End Hand-Over (FEH)

Far-End Hand-Over allows a call originated on an OAO network the opportunity to enter the *eircom* network for termination at selected Nodes. In the first instance all traffic destined for termination on the *eicrom* network will be accepted at any tertiary node.

In the second instance all geographic traffic destined for termination on the eircom network will also be accepted at any tandem node.

Eircom will only accept traffic destined for termination to *eircom* geographic numbers at any other Primary and Tandem nodes provided that the geographic number resides within the catchment area of that node. The *eircom* call termination scheme details the catchment areas associated with all allocated *eircom* geographic numbers

Published as a stand alone document on eircom's wholesale website

Eircom Reference Interconnect Offer Price List

version	status	source	Effective date

The RIO Price List is effective from the date approved by the National Regulator and remains in effect until superseded by a revised RIO Price List. The effective date and expiry of each individual price is separately highlighted. Where no effective date is shown, these changes have been effective prior to 01/07/00. The RIO Price List is published on the eircom Wholesale website.

This list contains details of the services detailed in Annex C of the eircom Reference Interconnect Offer, Version 3.9 an index of which is included below.

INDEX OF
Eircom Reference Interconnect Offer Price List

SERVICE SCHEDULE NUMBER	**SERVICE** TITLE
***eircom* Services**	
101.	
102.	*eircom* National Termination
103.	*eircom* Call Origination
104.	National Transit
105.	Access to *eircom* Premium Rate Services
106.	Access to *eircom* Freefone Service
107.	Access to *eircom* LoCall Service
113.	Access to *eircom* Callsave Service
114.	*Access to eircom* Universal Number Service
115.	*Access to eircom* Personal Numbering Service
116.	*eircom* National Directory Enquiries
117.	*eircom* International Directory Enquiries
113	*eircom* National Operator Assistance
114.	*eircom* International Operator Assistance
115.	Access to Emergency Services (999 \ 112)
116	Access to eircom Packet Services
118.	*eircom* Customer Care Access
119	International Access including Northern Ireland
120	*eircom* Carrier Pre-Selection (CPS Service)
121	Access to *eircom* Internet Service – 1891
122	Access to *eircom* Internet Service – 1892

Operator Services

205	Access to Operator Premium Rate Service
206	Access to Operator Freefone Service
207	Access to Operator Shared Cost Timed Service
208	Access to Operator Fixed Timed Service
209	Access to Operator Universal Access Service
210	Access to Operator Personal Numbering Service
221	Access to Operator 1891 Internet Service
222	Access to Operator 1892 Internet Service
223	Operator 1893 Primary Flat Rate Internet Access Call Origination Service

Note: the services denoted by 1xx relate to eircom offered services, whereas the services by 2xx relate to operator offered services

Joint Services

301	Reciprocal Non-Geographic Number Portability Service
302	Data Management Amendment
303	Reciprocal Geographic Number Portability Service

Single Billing through Carrier Pre-Selection

401	Single Billing through Wholesale Line Rental

The prices set out in the eircom RIO Price List are subject to the provisions of the European Communities (Electronic Communications Networks and Services)(Access) Regulations, 2003 (S.I. No 305 of 2003) and any other applicable Regulations. Accordingly, the prices may vary from time to time. Changes to these prices are subject to Clause 29.1 of each Interconnect Agreement. Changes to these prices shall be construed to be automatically part of all Interconnect Agreements with immediate effect from the date set by the National Regulator for the purpose of Clause 29.1 of the eircom RIO.

Prices are effective from the date indicated on this Price List. Where applicable, tables indicate the time frames for which a rate is valid with 'effective from' and 'effective to' dates shown.

The charges relevant to each service are listed in Euro or Euro cent. Traffic charging for each service shall be based on chargeable cumulative seconds for each Billing period rounded to the nearest minute plus per call charges unless otherwise stated.

Where rates are time of day graded, applicable time bands are defined below:

Peak Period: 8.00am – 6.00pm Weekdays
Off Peak: 6.00pm – 8.00am Weekdays
Weekend: Saturday, Sundays and Public Holidays

This pricing schedule takes account of two part charging which was introduced on 1 October 2001.
The following terminology is used:

- Charge per call (which could be denoted as the call set up charge)
- Cost per minute (which could be denoted as the call duration charge)

For call related services, prices are shown in Euro cent to 4 decimal points. All other services are shown in Euro to the nearest Euro cent.

Where requested, eircom has developed individual operator values as a basis for the calculation of NTC settlements.

Operators will be notified when changes are made to the RIO Price List published on eircom's website.

Published as a stand alone document on eircom's wholesale website

eircom Switched Transit Routing and Price List

Version Status Report

Version	Status	Source	Effective Date

This eircom Switched Transit Routing and Price list is published on the *eircom* Wholesale web site. It may be amended from time to time as rates payable to Interconnected operators change. *eircom* will provide 21 days notice of any transit rate change or addition to this document other than changes to the transit fee levied by *eircom* which shall be amended as determined by the National Regulator.

The tables indicate the status of each rate. Rates with a status of 'Final' are not subject to change, rates with a status of 'Interim' shall be billed at the interim rate until such time as this rate is finalised and a retrospective adjustment may be made at that point in time. The time frames for which a rate is applicable are indicated by the effective from and effective to dates.

Price changes to existing operator services in the Switched Transit and Routing Price List shall be affected in accordance with the processes set out in Appendix I to this document. Such changes shall be exempt from the requirements of Clause 29 of the Agreement. Operators will be notified when the publication on the web site is amended.

This Price list contains details of the services terminating on the networks of Authorised Operators who have requested *eircom* to open number ranges that have been granted to them by the National Regulator in the National Numbering Plan.

A list of services currently offered by Authorised Operators is provided in Table 1 below.

Routing

eircom accepts transit traffic destined for OAO geographic number ranges and to the mobile networks at the Tertiary switches and at all the Tandem switches.

In normal circumstances, Operators should deliver transit traffic to geographic numbers at a tandem switch in the appropriate geographic region. In the event that an operator wishes to deliver significant transit traffic at a tandem switch other than that in the geographic region, a specific forecast must be provided of the projected levels of such transit traffic. This should be done as an adjunct to the normal quarterly forecast for interconnect capacity provided to *eircom*. This forecast must be agreed with *eircom* in advance of any such traffic being delivered.

In relation to non-geographic transit traffic and transit to network specific codes other than mobile numbers, this traffic can only be delivered to the *eircom* network at the Tertiary switches.

Charging

Charging arrangements are described below.

- The charges relevant to each service are shown in the diagrams.
- The subsequent tables clearly indicate whether the charge is payable to the originating or terminating operator.
- Traffic charging for each service shall be based on chargeable cumulative seconds for each Billing period rounded to the nearest minute unless otherwise stated.
- The tables indicate the status of each rate. Rates with a status of 'Final' are not subject to change, rates with a status of 'Interim' shall be billed at the interim rate until such time as this rate is finalised and a retrospective adjustment may be made at that point in time. The time frames for which a rate is applicable are indicated by the effective from and effective to dates.
- In the event that direct accounting arrangements have been made between the Operator and the terminating network Operator, only the transit fee as specified in Service Schedule 104 National transit and included here in Table 002 shall apply. The transit fee is payable by the originating Operator in all instances with the exception of calls to NTC numbers in which case the transit fee is payable by the terminating Operator.

- **Euro Rates -** All rates are quoted in Euro cent/driver unit

Group 1
This group contains services provided by the terminating operator that involves 2 transactions. This group are from Tables 101 to 108.
Table 101, 103, 105 and 107 list the payment to the terminating Operator for the services listed in that table.
Table 102, 104, 106 and 108 list the charges to the originating operator for transit traffic destined for the services listed in that table.
See Figure 1 below.

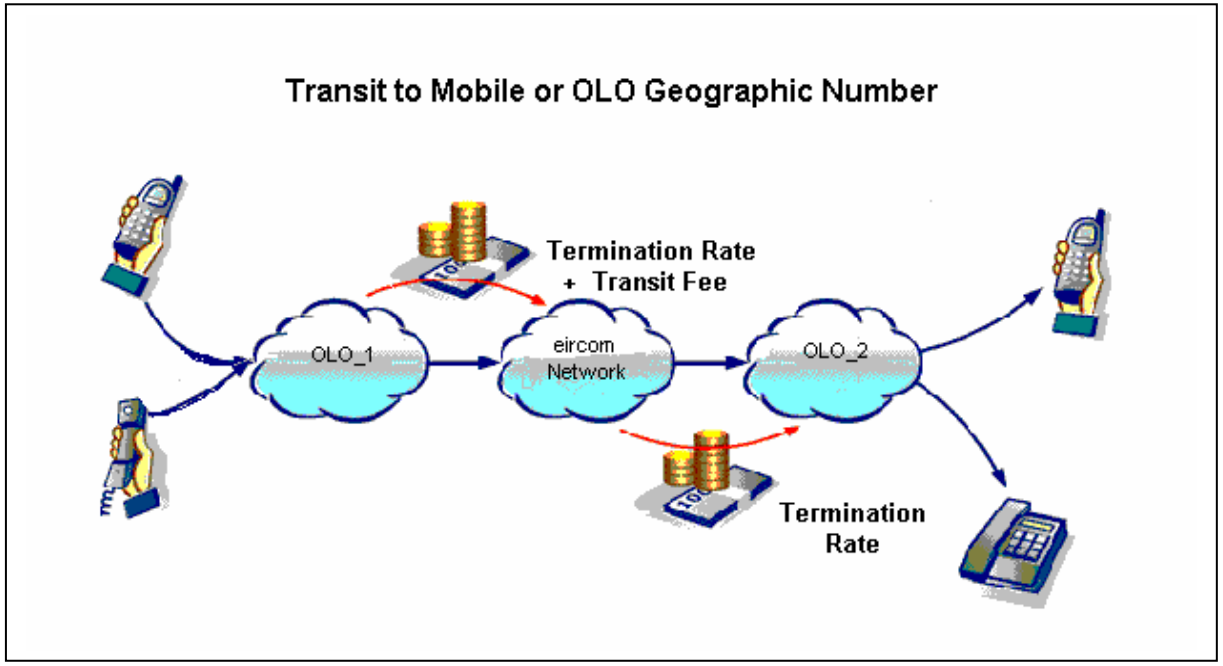

Figure 1 Cascade accounting Scenario for calls to Mobile, OAO Geographic Number Ranges and OAO DQ Services

Group 2

This group contains services provided by the terminating operator that involves 3 transactions. This group is from Tables 201 to 207. Table 201 to 207 list the payment to the terminating Operator for the services listed in that table. The same charges in Table 201 to 207 are levied by eircom on the originating operator for the services listed in that table. eircom then levies the transit fee in Table 002 on the terminating operator for the call.

See Figure 2 below.

For example, OAO1 rings OAO2 1550 and routes the traffic as transit through *eircom*. In this case *eircom* is invoiced by OAO2, the terminating NTC operator, for the appropriate NTC settlement fee, *eircom* invoices OAO2 for the transit fee and *eircom* also invoices OAO1, the originating operator, for the appropriate NTC settlement fee. See Figure 2 below.

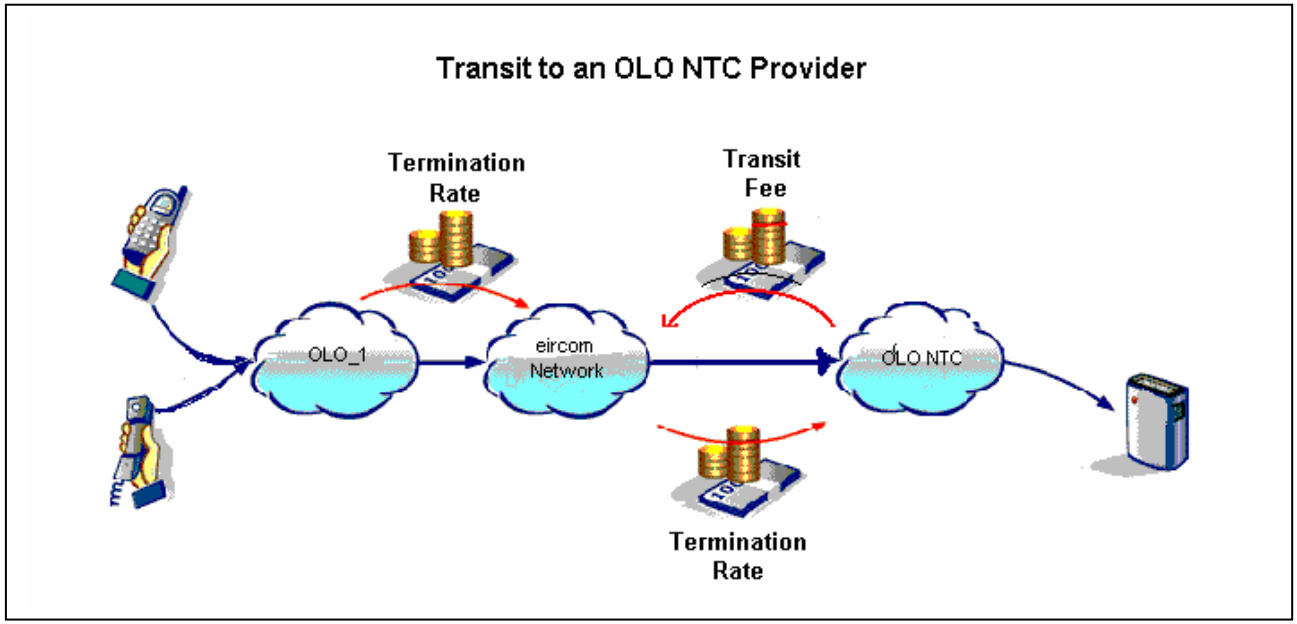

Figure 2 Transit to OAO NTC, blue lines denote call flow while red lines denote money flow

Group 3
This group contains services provided by the terminating operator that involve 2 transactions but payment goes to the Originating Operator.
This group are from Tables 301 to 308.
Tables 301, 303, 305 and 307 list the payment to the Originating Operator for the services listed in that table.
Table 302, 304, 306 and 308 list the charges to the terminating operator for transit traffic destined for the services listed in that table.
See Figure 3 Below.

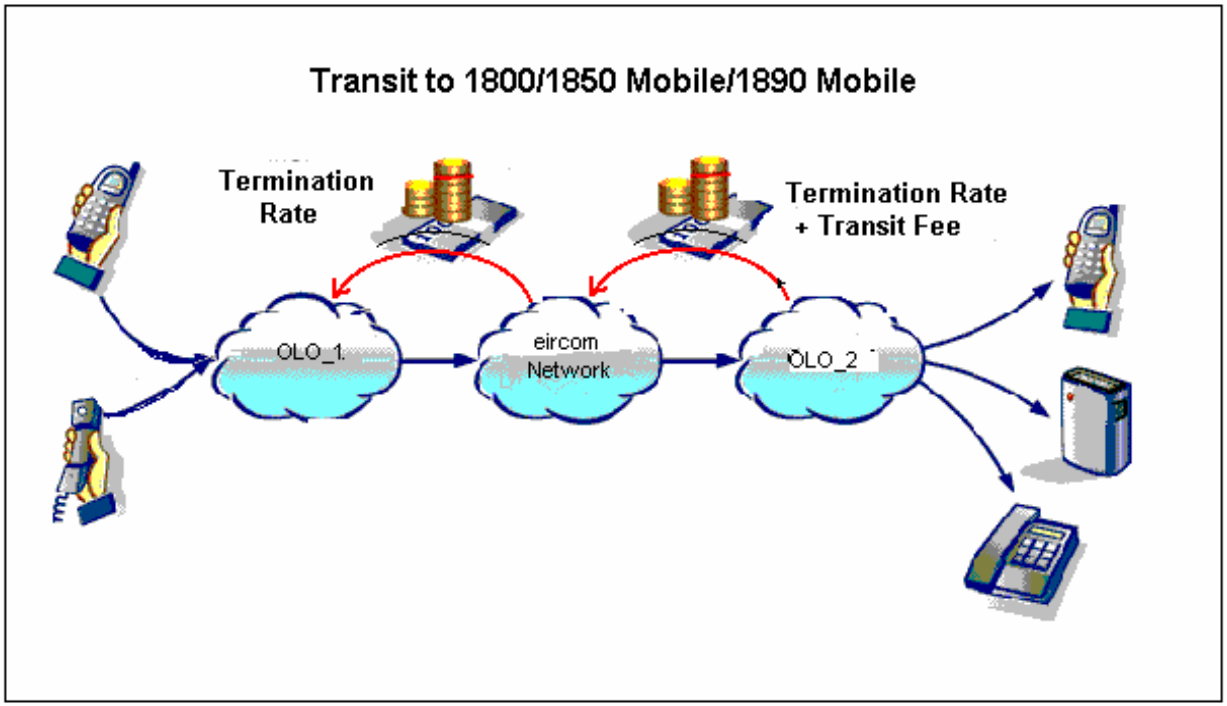

Figure 3 Transit to 1800 Fixed & Mobile/1850 Mobile/1890 Mobile, blue lines denote call flow while red lines denote money flow

PAC – Table 003

Table 003 lists the Payphone Access Charge levied by PAC Eligible Payphone Operators for calls originating on their payphone and terminating on a 1800 Freefone Service. This table clearly indicates the charges payable by the terminating Operators. This charge is supplemental to charges in tables 301 and 302.

List of Tables

Table Number	Contents	Pages
Table 001	List of Services Offered by Each Authorised Operator	11
Table 002	Transit Fee	12
Table 003	Payphone Access Charge for Freefone Calls	13
Table 101	Mobile Termination Rates	14
Table 102	Mobile Termination Rates including Transit Charge	15
Table 103	Geographical Termination Rates	16
Table 104	Geographical Origination Rates	17
Table 105	Directory Enquiries Termination Rates	18
Table 106	Directory Enquiries Origination Rates	19
Table 107	Customer Care Termination Rates	20
Table 108	Customer Care Origination Rates	21
Table 201	OAO Terminating Charges for Premium Rate Services	22
Table 202	OAO Terminating Charges for Universal Access	23
Table 203	OAO Terminating Charges for Personal Numbering	24
Table 204	OAO Callsave Charges for Fixed Operators	25
Table 205	OAO Lo-Call Charges for Fixed Operators	26
Table 206	OAO 1891 Internet Rates	27
Table 207	OAO 1892 Internet Rates	28
Table 301	OAO Freefone Charges for Fixed Operators - less Transit Fee where appropriate	29
Table 302	1800 Fixed Transit Schedule	30
Table 303	Mobile Charges to OAO Freefone Service- less Transit Fee where appropriate	31
Table 304	Mobile to 1800 Transit Schedule	32
Table 305	Mobile Charges to OAO Callsave Service – less Transit Fee where appropriate	33
Table 306	Mobile to 1850 Transit Schedule	34
Table 307	Mobile Charges to OAO Lo-Call – less Transit Fee where appropriate	35
Table 308	Mobile to 1890 Transit Schedule	36

Tables Relationship

Service	Group	Table No	Associated Table
Transit Fee		002	
Payphone Access Charge		003	
Mobile Termination	1	101	102
Geographical Termination	1	103	104
Directory Enquiries	1	105	106
Customer Care	1	107	108
Premium Rate Services	2	201	
Universal Access	2	202	
Personal Numbering	2	203	
1850 Charges for Fixed	2	204	
1890 Charges for Fixed	2	205	
1891 Internet Charges	2	206	
1892 Internet Charges	2	207	
1800 Charges for Fixed	3	301	302
1800 Charges for Mobile	3	303	304
1850 Charges for Mobile	3	305	306
1890 Charges for Mobile	3	307	308

Table 001
List of Services Offered by Each Authorised Operator

Terminating Operator	Geographic Number Termination	Mobile Termination	Premium Rate Services	Freefone 1800	Shared Cost Fixed Service 1850	Shared Cost Timed Service 1890	Customer Care 190*	Directory Enquiry	Personal Numbering	Universal Access	Internet 1891	Internet 1892	Payphone Access Charge
Budget	01/07/00	-	01/07/00	01/07/00	01/07/00	01/07/00	-	-	01/10/01	01/10/01	-	-	
Cable & Wireless	01/07/00	-	01/07/00	01/07/00	01/07/00	01/07/00	-	-	-	-	-	-	
Colt	01/05/02	-	01/07/00	01/07/00	01/07/00	01/07/00	-	-	01/09/02	01/09/02	01/09/02	-	
Conduit	-	-	-	-	-	-	-	01/07/00	-	-	-	-	
Vodafone	-	01/07/00	-	-	-	-	01/07/00	01/10/00	-	-	-	-	
O_2	-	01/07/00	-	-	-	-	01/07/00	01/10/00	-	-	-	-	
Esat Telecom	01/07/00	-	01/07/00	01/07/00	01/07/00	01/07/00	01/02/04	01/10/00	-	01/11/02	01/02/02	-	
Hutchison		01/10/03										-	
Chorus	01/07/00	-	01/07/00	01/07/00	01/07/00	01/07/00	-	-	-	-	01/09/03	-	
Access Telecom	01/09/03	-	01/07/00	01/07/00	01/07/00	01/07/00	-	-	-	-	-	-	
Meteor	-	01/07/00	-	-	-	-	01/07/00	-	-	-	-	-	
NTL	01/07/00	-	01/07/00	01/07/00	01/07/00	01/07/00	-	-	01/09/02	01/09/02	-	-	
Ocean	01/07/00	-	01/07/00	01/07/00	01/07/00	01/07/00	-	-	-	-	-	-	
Opera	-	-	01/02/04	01/02/04	01/02/04	01/02/04	-	-	01/02/04	01/02/04	01/02/04	01/02/04	
Nevada	01/07/00	-	01/07/00	01/07/00	01/07/00	01/07/00	-	-	01/05/02	01/05/02	-	-	
Swiftcall	-	-	-	01/07/00	01/04/03	01/07/00	-	-	-	-	-	-	
Smart													01/01/04
Talkshop	-	-	01/02/04	01/02/04	01/02/04	01/02/04	-	-	-	-	-	-	
TNS	-	-	-	01/07/00	-	-	-	-	-	-	-	-	
Vartec	-	-	01/07/00	01/07/00	01/07/00	01/07/00	-	-	01/09/02	01/09/02	01/02/02	-	
Worldcom	01/07/00	-	01/07/00	01/07/00	01/07/00	01/07/00	-	-	-	-	-	-	01/02/04

Table 1 lists the services currently offered by Authorised Operators

Table 002 Transit Fee									
	Cent Per Minute			Cent Per Call			Effective from	Effective to	Status
	Peak	Off Peak	Weekend	Peak	Off Peak	Weekend			
transit fee	0.457106	0.253948	0.253948				01/07/00	31/03/01	Final
transit fee	0.441	0.246	0.220				01/04/01	30/09/01	Final
transit fee	0.275	0.153	0.137	0.440	0.245	0.220	01/10/01	31/03/02	Final
transit fee	0.212	0.118	0.106	0.663	0.370	0.331	01/04/02		Interim

Note:
Table 2 lists the transit fee
Rates are quoted in cent

Table 003: Access to Freefone Payphone Originated 1800 Calls									
Operator	Cent Per Minute			Cent Per Call			Effective from	Effective to	Status
	Peak	Off Peak	Weekend	Peak	Off Peak	Weekend			
Smart	15.708000	15.708000	15.708000	-	-	-	01/01/04		Interim
MCI	15.708000	15.708000	15.708000	-	-	-	01/02/04		Interim

Note:
Table 003 lists the charges on the eircom/OAO 1800 network operator for calls to their 1800 service from a payphone
Rates are quoted in cent/driver unit.

Table 101 Mobile Termination Rates									
Operator	Cent Per Minute			Cent Per Call			Effective from	Effective to	Status
	Peak	Off Peak	Weekend	Peak	Off Peak	Weekend			
All Mobile	18.411202	12.062512	9.523036				01/07/00	30/09/00	Final
O_2 and Meteor	17.776333	11.427643	8.888167				01/10/00	30/06/02	Final
Vodafone	17.776333	11.427643	8.888167				01/10/00	31/05/02	Final
Vodafone	14.855936	11.427643	8.888167				01/06/02	31/05/03	Final
Vodafone	12.900000	11.420000	8.880000				01/06/03		Final
Meteor	17.776333	11.427643	8.888167				01/10/00		Final
O_2	14.500000	10.800000	8.700000				01/07/02	30/09/03	Final
O_2	13.400000	10.800000	8.700000				01/10/03		Final
Hutchison	17.776333	11.427643	8.888167				01/10/03		Final

Note:
Table 101 list the payment to the terminating Operator for the services listed in that table.
Rates are quoted in cent

Table 102 Mobile Termination Rates									
Operator	Cent Per Minute			Cent Per Call			Effective from	Effective to	Status
	Peak	Off Peak	Weekend	Peak	Off Peak	Weekend			
All mobile	18.868308	12.316460	9.776984				01/07/00	30/09/00	Interim
O_2 & Meteor	18.233439	11.681591	9.142115				01/10/00	31/03/01	Interim
O2 & Meteor	18.217333	11.673643	9.108167	-	-	-	01/04/01	30/09/01	Interim
O2 & Meteor	18.051333	11.580643	9.025167	0.440	0.245	0.220	01/10/01	31/03/02	Interim
O2 & Meteor	17.988333	11.545643	8.994167	0.663	0.370	0.331	01/04/02	30/06/02	Interim
Vodafone	18.233439	11.681591	9.142115	-	-	-	01/10/00	31/03/01	Interim
Vodafone	18.217333	11.673643	9.108167	-	-	-	01/04/01	30/09/01	Interim
Vodafone	18.051333	11.580643	9.025167	0.440	0.245	0.220	01/10/01	31/03/02	Interim
Vodafone	17.988333	11.545643	8.994167	0.663	0.370	0.331	01/04/02	31/05/02	Interim
Vodafone	15.067936	11.545643	8.994167	0.663	0.370	0.331	01/06/02	31/05/03	Interim
Vodafone	13.112000	11.538000	8.986000	0.663	0.370	0.331	01/06/03		Interim
Meteor	17.988333	11.545643	8.994167	0.663	0.370	0.331	01/07/02		Interim
O2	14.712	10.918	8.806	0.663	0.370	0.331	01/07/02	30/09/03	Interim
O2	13.612	10.918	8.806	0.663	0.370	0.331	01/10/03		Interim
Hutchison	17.988333	11.545643	8.994167	0.663	0.370	0.331	01/10/03		Interim

Note:
Table 102 list the charges to the originating operator for transit traffic destined for the services listed in that table.
Rates are quoted in cent

Table 103 Geographical Termination Rates										
Operator	Charging Level	Cent Per Minute			Cent Per Call			Effective from	Effective to	Status
		Peak	Off Peak	Weekend	Peak	Off Peak	Weekend			
Budget		1.041185	0.520593	0.419014				01/07/00		Final
C&W		1.041185	0.520593	0.419014				01/07/00		Interim
Esat Telecom		1.612567	0.812632	0.672961				01/07/00		Final
Chorus		1.022139	0.539639	0.457106				01/07/00		Final
NTL	Primary	1.022139	0.539639	0.457106				01/07/00	31/08/03	Final
NTL	Tandem	1.472896	0.768000	0.660264				01/07/00	31/08/03	Final
NTL	Double Tandem Short	1.752239	0.914211	0.781000				01/07/00	31/08/03	Final
NTL	Double Tandem Long	2.006186	1.041185	0.901514				01/07/00	31/08/03	Final
NTL		0.394889	0.218395	0.191730	0.744067	0.411395	0.360606	01/09/03		Interim
Ocean		1.612567	0.812632	0.672961				01/07/00		Final
Nevada		1.041185	0.520593	0.419014				01/07/00	31/03/02	Final
Nevada		0.394889	0.218395	0.191730	0.744067	0.411395	0.360606	01/04/02		Interim
Worldcom		1.041185	0.520593	0.419014				01/07/00		Interim
Colt		0.394889	0.218395	0.191730	0.744067	0.411395	0.360606	01/05/02		Interim
Access Telecom		0.495	0.318	0.292	0.844	0.511	0.461	01/09/03		Interim

Note:
Table 103 list the payment to the terminating Operator for the services listed in that table.
Rates are quoted in cent

Table 104
Geographic Origination Rates

Operator	Charging Level	Cent Per Minute			Cent Per Call			Effective from	Effective to	Status
		Peak	Off Peak	Weekend	Peak	Off Peak	Weekend			
Budget		1.498291	0.774541	0.672962	-	-	-	01/07/00	31/03/01	Interim
Budget		1.482185	0.766593	0.639014	-	-	-	01/04/01	30/09/01	
Budget		1.316185	0.673593	0.556014	0.440	0.245	0.220	01/10/01	31/03/02	Interim
Budget		1.253185	0.638593	0.525014	0.663	0.370	0.331	01/04/02		Interim
C&W		1.498291	0.774541	0.672962	-	-	-	01/07/00	31/03/01	Interim
C&W		1.482185	0.766593	0.639014	-	-	-	01/04/01	30/09/01	
C&W		1.316185	0.673593	0.556014	0.440	0.245	0.220	01/10/01	31/03/02	Interim
C&W		1.253185	0.638593	0.525014	0.663	0.370	0.331	01/04/02		Interim
Esat Telecom		2.069673	1.066580	0.926909	-	-	-	01/07/00	31/03/01	Final
Esat Telecom		2.053567	1.058632	0.892961	-	-	-	01/04/01	30/09/01	Final
Esat Telecom		1.887567	0.965632	0.809961	0.440	0.245	0.220	01/10/01	31/03/02	Final
Esat Telecom		1.824567	0.930632	0.778961	0.663	0.370	0.331	01/04/02		Interim*
Chorus		1.479245	0.793587	0.711054	-	-	-	01/07/00	31/03/01	Interim
Chorus		1.463139	0.785639	0.677106	-	-	-	01/04/01	30/09/01	
Chorus		1.297139	0.692639	0.594106	0.440	0.245	0.220	01/10/01	31/03/02	Interim
Chorus		1.234139	0.657639	0.563106	0.663	0.370	0.331	01/04/02		
NTL	primary	1.479245	0.793587	0.711054	-	-	-	01/07/00	31/03/01	Interim
	tandem	1.930002	1.021948	0.914212	-	-	-	01/07/00	31/03/01	Interim
	double tandem short	2.209345	1.168159	1.034948	-	-	-	01/07/00	31/03/01	Interim
	double tandem long	2.463292	1.295133	1.155462	-	-	-	01/07/00	31/03/01	Interim
NTL	primary	1.463139	0.785639	0.677106	-	-	-	01/04/01	30/09/01	Interim
	tandem	1.913896	1.014000	0.880264	-	-	-	01/04/01	30/09/01	Interim
	double tandem short	2.193239	1.160211	1.001000	-	-	-	01/04/01	30/09/01	Interim
	double tandem long	2.447186	1.287185	1.121514	-	-	-	01/04/01	30/09/01	Interim
NTL	primary	1.297139	0.692639	0.594106	0.440	0.245	0.220	01/10/01	31/03/02	
	tandem	1.747896	0.921000	0.797264	0.440	0.245	0.220	01/10/01	31/03/02	
	double tandem short	2.027239	1.067211	0.918000	0.440	0.245	0.220	01/10/01	31/03/02	
	double tandem long	2.281186	1.194185	1.038514	0.440	0.245	0.220	01/10/01	31/03/02	
NTL	primary	1.234139	0.657639	0.563106	0.663	0.370	0.331	01/04/02	31/08/03	Interim
	tandem	1.684896	0.886000	0.766264	0.663	0.370	0.331	01/04/02	31/08/03	Interim
	double tandem short	1.964239	1.032211	0.887000	0.663	0.370	0.331	01/04/02	31/08/03	Interim
	double tandem long	2.218186	1.159185	1.007514	0.663	0.370	0.331	01/04/02	31/08/03	Interim
NTL		0.606889	0.336395	0.297730	1.407	0.781	0.692	01/09/03		Interim
Ocean		2.069673	1.066580	0.926909	-	-	-	01/07/00	31/03/01	Final
Ocean		2.053567	1.058632	0.892961	-	-	-	01/04/01	30/09/01	Final
Ocean		1.887567	0.965632	0.809961	0.440	0.245	0.220	01/10/01		Final
Ocean		1.824567	0.930632	0.778961	0.663	0.370	0.331			Interim*
Nevada		1.498291	0.774541	0.672962	-	-	-	01/07/00	31/03/01	Interim
Nevada		1.482185	0.766593	0.639014	-	-	-	01/04/01	30/09/01	
Nevada		0.669889	0.371395	0.328730	0.440	0.245	0.220	01/10/01	31/03/02	Interim
Nevada		0.606889	0.336395	0.297730	1.407067	0.781395	0.691606	01/04/02		Interim
Worldcom		1.498291	0.774541	0.672962	-	-	-	01/07/00	31/03/01	Interim
Worldcom		1.482185	0.766593	0.639014	-	-	-	01/04/01	30/09/01	
Worldcom		1.316185	0.673593	0.556014	0.440	0.245	0.220	01/10/01	31/03/02	Interim
Worldcom		1.253185	0.638593	0.525014	0.663	0.370	0.331	01/04/02		Interim
Colt		0.606889	0.336395	0.297730	1.407067	0.781395	0.691606	01/05/02		Interim
Access Telecom		0.707000	0.436000	0.398000	1.507000	0.881000	0.792000	01/09/03		Interim

Note:
Table 104 list the charges to the originating operator for transit traffic destined for the services listed in that table.
* These Rates are interim due to the fact that the transit element has yet to be finalised.
Rates are quoted in cent

Table 105
Directory Enquiries Termination Rates

Operator	Cent Per Minute			Cent Per Call			Call(incl 1st min) Charge	Subsequent minute Charge	Effective from	Effective to	Status
	Peak	Off Peak	Weekend	Peak	Off Peak	Weekend					
Conduit National							29.800753	29.800753	01/07/00	31/03/01	Final
Conduit National							40.555434	29.800753	01/04/01	31/01/02	Final
Conduit National							44.402741	29.800753	01/02/02	31/01/03	Final
Conduit National							46.460000	30.480000	01/02/03	30/09/03	Final
Conduit National	32.660000	32.660000	32.660000	31.360000	31.360000	31.360000			01/10/03		Interim
Conduit							95.801738	45.697873	01/07/00	31/03/01	Final
Conduit							95.801738	95.801738	01/04/01	31/07/02	Final
Conduit							140.89000	95.801738	01/08/02	31/01/03	Final
Conduit							141.75000	96.990000	01/03/02		Final
Esat Telecom							34.282928	34.282928	01/10/00	30/09/01	Final
Esat Telecom							37.139800	37.139800	01/10/01		Final
O_2 National	48.123073	48.123073	48.123073						01/10/00		Final
O_2 International	100.690230	100.690230	100.690230						01/10/00		Final
Vodafone National	57.138214	57.138214	57.138214						01/10/00		Final

Note:
Table 105 list the payment to the terminating Operator for the services listed in that table.
Rates are quoted in cent

Table 106
Directory Enquires Origination Rates

Operator	Cent Per Minute			Cent Per Call			Call(incl 1st min) Charge	Subsequent minute Charge	Effective from	Effective to	Status
	Peak	Off Peak	Weekend	Peak	Off Peak	Weekend					
Conduit	0.457106	0.253948	0.253948	-	-	-	29.800753	29.800753	01/07/00	31/03/01	Interim
Conduit	0.441	0.246	0.220	-	-	-	40.555434	23.47	01/04/01	30/09/01	Interim
Conduit	0.275000	0.153000	0.137000	0.440	0.245	0.220	40.555434	23.47	01/10/01	31/01/02	Interim
Conduit	0.275000	0.153000	0.137000	0.440	0.245	0.220	44.402741	23.47	01/02/02	31/03/02	Interim
Conduit	0.212000	0.118000	0.106000	0.663	0.370	0.331	44.402741	23.47	01/04/02	31/01/03	Interim
Conduit	0.212000	0.118000	0.106000	0.663	0.370	0.331	46.46	30.48	01/02/03	30/09/03	Interim
Conduit	32.872000	32.778000	32.766000	32.023	31.730	31.691	-	-	01/10/03		Interim
Conduit	0.457106	0.253948	0.253948	-	-	-	95.801738	45.697873	01/07/00	31/03/01	Interim
Conduit	0.441	0.246	0.220	-	-	-	95.801738	95.801738	01/04/01	30/09/01	Interim
Conduit	0.275	0.153	0.137	0.440	0.245	0.220	95.801738	95.801738	01/10/01	31/03/02	Interim
Conduit	0.212	0.118	0.106	0.663	0.370	0.331	95.801738	95.801738	01/04/02	31/07/02	Interim
Conduit	0.212	0.118	0.106	0.663	0.370	0.331	140.89	95.801738	01/08/02	31/01/03	Interim
Conduit	0.212	0.118	0.106	0.663	0.370	0.331	141.75	96.99	01/02/03		Interim
Esat Telecom	0.457106	0.253948	0.253948	-	-	-	34.282928	34.282928	01/07/00	31/03/01	Interim
Esat Telecom	0.4410	0.2460	0.2200				34.282928	34.282928	01/04/01	30/09/01	Interim
Esat Telecom	0.275	0.153	0.137	0.440	0.245	0.220	37.1398	37.140	01/10/01	31/03/02	Interim
Esat Telecom	0.212	0.118	0.106	0.663	0.370	0.331	37.1398	37.140	01/04/02		Interim
O_2 National	48.580179	48.377021	48.377021						01/10/00	31/03/01	Interim
O2 National	48.564073	48.369073	48.343073						01/04/01	30/09/01	Interim
O_2 National	48.398073	48.276073	48.260073	0.440	0.245	0.220			01/10/01	31/03/02	Interim
O2 National	48.335073	48.241073	48.229073	0.663	0.370	0.331			01/04/02		Interim
O_2	101.147336	100.944178	100.944178						01/10/00	31/03/01	Interim
O2	101.131230	100.936230	100.910230						01/04/01	30/09/01	Interim
O_2	100.96523	100.84323	100.82723	0.440	0.245	0.220			01/10/01	31/03/02	Interim
O2	100.90223	100.80823	100.79623	0.663	0.370	0.331			01/04/02		Interim
Vodafone	57.595320	57.392162	57.392162						01/10/00	31/03/01	Interim
Vodafone	57.579214	57.384214	57.358214						01/04/01	30/09/01	Interim
Vodafone	57.413214	57.291214	57.275214	0.440	0.245	0.220			01/10/01	31/03/02	Interim
Vodafone	57.350214	57.256214	57.244214	0.663	0.370	0.331			01/04/02		

Note:
Table 106 list the charges to the originating operator for transit traffic destined for the services listed in that table.
Rates are quoted in cent

Table 107 Operator Specific Price List for Customer Care									
Operator	Cent Per Minute			Cent Per Call			Effective from	Effective to	Status
	Peak	Off Peak	Weekend	Peak	Off Peak	Weekend			
Vodafone	-	-	-	-	-	-	01/07/00		Final
O2	-	-	-	-	-	-	01/07/00		Final
Meteor	-	-	-	-	-	-	01/07/00		Final
Esat	-	-	-	-	-	-	01/02/04		Final

Note:
Table 107 list the payment to the terminating Operator for the services listed in that table.
Rates are quoted in cent

Table 108 Operator Specific Price List for Customer Care									
Operator	Cent Per Minute			Cent Per Call			Effective from	Effective to	Status
	Peak	Off Peak	Weekend	Peak	Off Peak	Weekend			
Vodafone	0.457106	0.253948	0.253948	-	-	-	01/07/00	31/03/01	Interim
Vodafone	0.441	0.246	0.220	-	-	-	01/10/01	31/03/02	Interim
Vodafone	0.275	0.153	0.137	0.440	0.245	0.220	01/04/02		Interim
Vodafone	0.212	0.118	0.106	0.663	0.370	0.331			
O2	0.457106	0.253948	0.253948	-	-	-	01/07/00	31/03/01	Interim
O2	0.441	0.246	0.220	-	-	-	01/10/01	31/03/02	Interim
O2	0.275	0.153	0.137	0.440	0.245	0.220	01/04/02		Interim
O2	0.212	0.118	0.106	0.663	0.370	0.331			
Meteor	0.457106	0.253948	0.253948	-	-	-	01/07/00	31/03/01	Interim
Meteor	0.441	0.246	0.220	-	-	-	01/10/01	31/03/02	Interim
Meteor	0.275	0.153	0.137	0.440	0.245	0.220	01/04/02		Interim
Meteor	0.212	0.118	0.106	0.663	0.370	0.331			
Esat	0.212	0.118	0.106	0.663	0.370	0.331	01/02/04		Interim

Note:
Table 108 list the charges to the originating operator for transit traffic destined for the services listed in that table.
Rates are quoted in cent

Table 201 Price List for Premium Rate Services										
Operator	Service Type	Cent Per Minute			Cent Per Call			Effective from	Effective to	Status
		Peak	Off Peak	Weekend	Peak	Off Peak	Weekend			
All Operators	1530	24.671011	25.470946	26.880356	- 4.380596	- 3.923491	- 3.834609	01/07/00	30/09/00	Interim
All Operators	1530	25.280485	26.029631	25.394762	-	-	-	01/10/00	30/09/01	Interim
All Operators	1530	24.709103	25.534433	25.572525	-	-	-	01/10/01		Interim
All Operators	1540	- 1.599870	- 0.787237	- 0.647566	42.066423	42.523528	42.599713	01/07/00	30/09/00	Interim
All Operators	1540	-	-	-	44.161490	44.453530	44.466228	01/10/00	30/09/01	Interim
All Operators	1540	-	-	-	43.272674	43.082213	43.259976	01/10/01		Interim
All Operators	1550	59.931638	59.995125	60.325256	- 4.380596	- 3.923491	- 3.834609	01/07/00	30/09/00	Interim
All Operators	1550	59.601506	60.299862	60.261770	-	-	-	01/10/00	30/09/01	Interim
All Operators	1550	57.874662	58.839663	58.585715	-	-	-	01/10/01		Interim
All Operators	1560	76.057311	76.869944	76.996917	- 4.380596	- 3.923491	- 3.834609	01/07/00	30/09/00	Interim
All Operators	1560	76.387443	77.123891	77.047707	-	-	-	01/10/00	30/09/01	Interim
All Operators	1560	75.460534	76.285864	76.311259	-	-	-	01/10/01		Interim
All Operators	1570	101.350494	102.163126	102.290100	- 4.380596	- 3.923491	- 3.834609	01/07/00	30/09/00	Interim
All Operators	1570	102.467863	103.166219	103.128127	-	-	-	01/10/00	30/09/01	Interim
All Operators	1570	101.553652	102.188521	102.252007	-	-	-	01/10/01		Interim
All Operators	1580	150.667121	151.467056	151.606727	- 4.380596	- 3.923491	- 3.834609	01/07/00	30/09/00	Interim
All Operators	1580	153.337913	153.981137	153.968440	-	-	-	01/10/00	30/09/01	Interim
All Operators	1580	153.155807	153.777979	153.816071	-	-	-	01/10/01		Interim

Note:
Table 201 list the payment to the terminating Operator for the services listed in that table.
The same charges in Table 201 are levied by eircom on the originating operator for the services listed in that table.
eircom then levies the transit fee in Table 002 on the terminating operator for the call.
Rates are quoted in cent

Table 202 OAO Terminating Charges for Universal Access									
Operator	Cent Per Minute			Cent Per Call			Effective from	Effective to	Status
	Peak	Off Peak	Weekend	Peak	Off Peak	Weekend			
All Operators	6.729612	4.786913	4.469478				01/10/01		Interm

Note:
Table 202 list the payment to the terminating Operator for the services listed in that table.
The same charges in Table 202 are levied by eircom on the originating operator for the services listed in that table.
eircom then levies the transit fee in Table 002 on the terminating operator for the call.
Rates are quoted in cent

Table 203 OAO Terminating Charges for Personal Numbering									
Operator	Cent Per Minute			Cent Per Call			Effective from	Effective to	Status
	Peak	Off Peak	Weekend	Peak	Off Peak	Weekend			
All Operators	6.729612	4.786913	4.469478				01/10/01		Interm

Note:
Table 203 list the payment to the terminating Operator for the services listed in that table.
The same charges in Table 203 are levied by eircom on the originating operator for the services listed in that table.
eircom then levies the transit fee in Table 002 on the terminating operator for the call.
Rates are quoted in cent

Table 204 1850 Charges for Fixed Operators									
Service Type	Cent Per Minute			Cent Per Call			Effective from	Effective to	Status
	Peak	Off Peak	Weekend	Peak	Off Peak	Weekend			
Fixed Operators	-4.342504	-3.225134	-3.14895	4.380596	3.923491	3.834609	01/07/00	31/10/00	Interim
Fixed Operators	0	0	0	0	1.676054	1.803028	01/11/00	31/03/01	Interim
Fixed Operators	0	0	0	0	1.676054	1.803028	01/04/01	30/09/01	Interim
Fixed Operators	0	0	0	0.304737	1.676054	1.917304	01/10/01	31/03/02	Interim
Fixed Operators	0	0	0	0.304737	1.676054	1.917304	01/04/02		Interim

Note:
Table 204 list the payment to the terminating Operator for the services listed in that table.
The same charges in Table 204 are levied by eircom on the originating operator for the services listed in that table.
eircom then levies the transit fee in Table 002 on the terminating operator for the call.
Rates are quoted in cent

Table 205 1890 Charges for Fixed Operators									
Service Type	Cent Per Minute			Cent Per Call			Effective from	Effective to	Status
	Peak	Off Peak	Weekend	Peak	Off Peak	Weekend			
Fixed Operator	1.59987	0.787238	0.647567	-6.653428	-7.110533	-7.186718	01/07/00	31/10/00	Interim
Fixed Operator	2.755332	0.596777	0.380922	0	0	0	01/11/00	31/03/01	Interim
Fixed Operator	2.755332	0.596777	0.380922	0	0	0	01/04/01	30/09/01	Interim
Fixed Operator	2.933095	0.723751	0.723751	0	0	0	01/10/01	31/03/02	Interim
Fixed Operator	2.933095	0.723751	0.723751	0	0	0	01/04/02		Interim

Note:
Table 205 list the payment to the terminating Operator for the services listed in that table.
The same charges in Table 205 are levied by eircom on the originating operator for the services listed in that table.
eircom then levies the transit fee in Table 002 on the terminating operator for the call.
Rates are quoted in cent

Table 206 1891 Internet Charges									
Operator	Cent Per Minute			Cent Per Call			Effective from	Effective to	Status
	Peak	Off Peak	Weekend	Peak	Off Peak	Weekend			
All Operators	0.907863	0.561224	0.521862	-	-	-	01/02/02		Interim

Note:
Table 206 list the payment to the terminating Operator for the services listed in that table.
The same charges in Table 206 are levied by eircom on the originating operator for the services listed in that table.
eircom then levies the transit fee in Table 002 on the terminating operator for the call.
Rates are quoted in cent

Table 207 1892 Internet Charges									
Operator	Cent Per Minute			Cent Per Call			Effective from	Effective to	Status
	Peak	Off Peak	Weekend	Peak	Off Peak	Weekend			
All Operators	3.300000	0.650000	0.670000	-	-	-	01/02/04		Interim

Note:
Table 207 list the payment to the terminating Operator for the services listed in that table.
The same charges in Table 207 are levied by eircom on the originating operator for the services listed in that table.
eircom then levies the transit fee in Table 002 on the terminating operator for the call.
Rates are quoted in cent

Table 301 1800 Charges for Fixed Operators - less transit fee where appropriate (Euro Cent)									
Operator	Cent Per Minute			Cent Per Call			Effective from	Effective to	Status
	Peak	Off Peak	Weekend	Peak	Off Peak	Weekend			
Fixed Operators	1.599870	0.787238	0.647566	4.380596	3.923491	3.834609	01/07/00	31/10/00	Interim
Fixed Operators	1.587173	0.990396	0.990396				01/11/00	30/09/01	Interim
Fixed Operators	1.587173	1.104672	1.244343				01/10/01		Interim

Note:
Tables 301 list the payment to the Originating Operator for the services listed in that table.
Rates are quoted in cent

Table 302 1800 Fixed Transit Schedule									
Service Type	Cent Per Minute			Cent Per Call			Effective from	Effective to	Status
	Peak	Off Peak	Weekend	Peak	Off Peak	Weekend			
Originating Freefone from Fixed Operator	2.056976	1.041186	0.901514	4.380596	3.923491	3.834609	01/07/00	31/10/00	Interim
Originating Freefone from Fixed Operator	2.044279	1.244344	1.244344	0	0	0	01/11/00	31/03/01	Interim
Originating Freefone from Fixed Operator	2.028173	1.236396	1.210396	0	0	0	01/04/01	30/09/01	Interim
Originating Freefone from Fixed Operator	1.862173	1.257672	1.381343	0.44	0.245	0.22	01/10/01	31/03/02	Interim
Originating Freefone from Fixed Operator	1.799173	1.222672	1.350343	0.663	0.37	0.331	01/04/02		Interim

Note:
Table 302 list the charges to the terminating operator for transit traffic destined for the services listed in that table.
Rates are quoted in cent

Table 303 1800 Charges for Mobile - less transit fee where appropriate (Euro Cent)									
Operator	Cent Per Minute			Cent Per Call			Effective from	Effective to	Status
	Peak	Off Peak	Weekend	Peak	Off Peak	Weekend			
Vodafone to Freefone	18.411202	12.062512	9.523036				01/07/00		Final
O_2 to Freefone	18.411202	12.062512	9.523036				01/07/00	30/09/00	Final
O_2 to Freefone	34.282928	18.728637	15.236857				01/10/00	31/08/03	Final
O_2 to Freefone	23.300000	17.800000	14.800000				01/09/03		Final
Meteor to Freefone	34.282928	18.728637	15.236857				01/01/01		Final

Note:
Tables 303 list the payment to the Originating Operator for the services listed in that table.
Rates are quoted in cent

Table 304 Mobile to 1800 Transit Schedule									
Service Type	Cent Per Minute			Cent Per Call			Effective from	Effective to	Status
	Peak	Off Peak	Weekend	Peak	Off Peak	Weekend			
Originating Freefone from Vodafone	18.868308	12.316460	9.776984	-	-	-	01/07/00	31/03/01	Interim
Originating Freefone from Vodafone	18.852202	12.308512	9.743036	-	-	-	01/04/01	30/09/01	Interim
Originating Freefone from Vodafone	18.686202	12.215512	9.660036	0.440	0.245	0.220	01/10/01	31/03/02	Interim
Originating Freefone from Vodafone	18.623202	12.180512	9.629036	0.663	0.370	0.331	01/04/02		Interim
Originating Freefone from O2	18.868308	12.316460	9.776984	-	-	-	01/07/00	30/09/00	Interim
Originating Freefone from O2	34.740034	18.982585	15.490805	-	-	-	01/10/00	31/03/01	Interim
Originating Freefone from O2	34.723928	18.974637	15.456857				01/04/01	30/09/01	Interim
Originating Freefone from O2	34.557928	18.881637	15.373857	0.440	0.245	0.220	01/10/01	31/03/02	Interim
Originating Freefone from O2	34.494928	18.846637	15.342857	0.663	0.370	0.331	01/04/02	31/08/03	Interim
Originating Freefone from O2	23.512000	17.918000	14.906000	0.663	0.370	0.331	01/09/03		Interim
Originating Freefone from Meteor	34.740034	18.982585	15.490805	-	-	-	01/01/01	31/03/01	Interim
Originating Freefone from Meteor	34.723928	18.974637	15.456857	-	-	-	01/04/01	30/09/01	Interim
Originating Freefone from Meteor	34.557928	18.881637	15.373857	0.440	0.245	0.220	01/10/01	31/03/02	Interim
Originating Freefone from Meteor	34.494928	18.846637	15.342857	0.663	0.370	0.331	01/04/02		Interim

Note:
Table 304 list the charges to the terminating operator for transit traffic destined for the services listed in that table.
Rates are quoted in cent

Table 305 1850 Charges for Mobile - less transit fee where appropriate (Euro Cent)									
Service Type	Cent Per Minute			Cent Per Call			Effective from	Effective to	Status
	Peak	Off Peak	Weekend	Peak	Off Peak	Weekend			
Vodafone to 1850	4.164741	2.539476	2.539476				01/07/00		Final
O_2 to 1850	4.164741	2.539476	2.539476				01/07/00	30/09/00	Final
O_2 to 1850	16.747845	9.319877	9.129417				01/10/00		Final
Meteor to 1850	16.747845	9.319877	9.129417				01/01/01		Final

Note:
Tables 305 list the payment to the Originating Operator for the services listed in that table.
Rates are quoted in cent

Table 306 Mobile to 1850 Transit Schedule									
Service Type	Cent Per Minute			Cent Per Call			Effective from	Effective to	Status
	Peak	Off Peak	Weekend	Peak	Off Peak	Weekend			
Vodafone to Shared Cost Timed Service	4.621847	2.793424	2.793424	-	-	-	01/07/00	31/03/01	Interim
Vodafone to Shared Cost Timed Service	4.605741	2.785476	2.759476	-	-	-	01/04/01	30/09/01	Interim
Vodafone to Shared Cost Fixed Service	4.439741	2.692476	2.676476	0.440	0.245	0.220	01/10/01	31/03/02	Interim
Vodafone to Shared Cost Fixed Service	4.376741	2.657476	2.645476	0.663	0.370	0.331	01/04/02		Interim
O2 to Shared Cost Fixed Service	4.621847	2.793424	2.793424	-	-	-	01/07/00	30/09/00	Interim
O2 to Shared Cost Fixed Service	17.204951	9.573825	9.383365	-	-	-	01/10/00	31/03/01	Interim
O2 to Shared Cost Fixed Service	17.188845	9.565877	9.349417				01/04/01	30/09/01	Interim
O2 to Shared Cost Fixed Service	17.022845	9.472877	9.266417	0.440	0.245	0.220	01/10/01	31/03/02	Interim
O2 to Shared Cost Fixed Service	16.959845	9.437877	9.235417	0.663	0.370	0.331	01/04/02		Interim
Meteor to Shared Cost Fixed Service	17.204951	9.573825	9.383365	-	-	-	01/01/01	31/03/01	Interim
Meteor to Shared Cost Fixed Service	17.188845	9.565877	9.349417				01/04/01	30/09/01	Interim
Meteor to Shared Cost Fixed Service	17.022845	9.472877	9.266417	0.440	0.245	0.220	01/10/01	31/03/02	Interim
Meteor to Shared Cost Fixed Service	16.959845	9.437877	9.235417	0.663	0.370	0.331	01/04/02		Interim

Note:
Table 306 list the charges to the terminating operator for transit traffic destined for the services listed in that table.
Rates are quoted in cent

Table 307 1890 Charges for Mobile - less transit fee where appropriate (Euro Cent)									
Service Type	Cent Per Minute			Cent Per Call			Effective from	Effective to	Status
	Peak	Off Peak	Weekend	Peak	Off Peak	Weekend			
Vodafone to 1890	4.164741	2.539476	2.539476				01/07/00		Final
O_2 to 1890	4.164741	2.539476	2.539476				01/07/00		Final
Meteor to 1890	4.164741	2.539476	2.539476				01/01/01		Final

Note:
Tables 307 list the payment to the Originating Operator for the services listed in that table.
Rates are quoted in cent

Table 308 Mobile to 1890 Transit Schedule									
Service Type	Cent Per Minute			Cent Per Call			Effective from	Effective to	Status
	Peak	Off Peak	Weekend	Peak	Off Peak	Weekend			
Vodafone to Shared Cost Timed Service	4.621847	2.793424	2.793424	-	-	-	01/07/00	31/03/01	Interim
Vodafone to Shared Cost Timed Service	4.605741	2.785476	2.759476				01/04/01	30/09/01	Interim
Vodafone to Shared Cost Timed Service	4.439741	2.692476	2.676476	0.440	0.245	0.220	01/10/01	31/03/02	Interim
Vodafone to Shared Cost Timed Service	4.376741	2.657476	2.645476	0.663	0.370	0.331	01/04/02		Interim
O_2 to Shared Cost Timed Service	4.621847	2.793424	2.793424	-	-	-	01/07/00	31/03/01	Interim
O2 to Shared Cost Timed Service	4.605741	2.785476	2.759476				01/04/01	30/09/01	Interim
O_2 to Shared Cost Timed Service	4.439741	2.692476	2.676476	0.440	0.245	0.220	01/10/01	31/03/02	Interim
O2 to Shared Cost Timed Service	4.376741	2.657476	2.645476	0.663	0.370	0.331	01/04/02		Interim
Meteor to Shared Cost Timed Service	4.621847	2.793424	2.793424	-	-	-	01/01/01	31/03/01	Interim
Meteor to Shared Cost Timed Service	4.605741	2.785476	2.759476	-	-	-	01/04/01	31/09/01	Interim
Meteor to Shared Cost Timed Service	4.439741	2.692476	2.676476	0.440	0.245	0.220	01/10/01	31/03/02	Interim
Meteor to Shared Cost Timed Service	4.376741	2.657476	2.645476	0.663	0.370	0.331	01/04/02		Interim

Note:
Table 308 list the charges to the terminating operator for transit traffic destined for the services listed in that table.
Rates are quoted in cent

Appendix I

Process for the Implementation of Operator De-Averaged NTC Price Changes

This process applies where quarterly changes are being made to OAO NTC settlement rates as part of Operator de-averaged pricing.

Month 2 &3

- Upon ComReg approval of changes to operator NTC settlement rates, eircom have 2 Working Days to notify all OAOs by email of the proposed change to the Switched Transit and Routing Price List and to advise ComReg of this notification.
- Operators have 5 Working Days from date of issue of email by eircom to raise queries or seek clarification regarding the rates.
- If no queries or technical issues are raised or remain outstanding after the 5 Working Day period, ComReg will approve the price within 1 Working Day thereafter. This approval must be at least 15 Working Days in advance of the effective date of the rate. If not, the application must deferred for 1 month.

Month 4

- Billing systems begin recording with new rate.